AIRTAB

Airtab® Fuel Savers

SAFETY / STABILITY / SAVINGS

No. REF/AT01/70/WHITE White 70 Units per kit
wgt. 1.10kg

No. REF/AT01/70/BLACK Black 70 Units per kit
wgt. 1.10kg

SAFETY / STABILITY / SAVINGS

Airtabs® are patented, unique wishbone shaped vortex generators designed to increase vehicle aerodynamic performance and fuel economy by reducing aerodynamic pressure drag at two key locations; the tractor-trailer gap and the rear facing surface (the base area) of any commercial or private square backed vehicle or trailer that routinely attains motorway speeds. Drag reduction and fuel economy benefits from Airtab® application is not limited to commercial vehicle operations. Airtabs® enhance aerodynamic performance equally well on trucks, trailers, cube vans, rigid trucks, delivery vans, 4x4's, people carriers, RV's, buses, horseboxes, towing trailers, caravans and tankers. The results may vary somewhat with vehicle type but the aerodynamic theory and principles are the same for all.

WHAT ARE AIRTABS®?

- Airtab® is a product designed to reduce fuel consumption by altering, controlling and smoothing air flow around a vehicle.
- Airtabs® have been developed into a user-friendly & attractive product that can be fitted on most vehicles simply & quickly.
- Designed by aerodynamic experts to give optimum performance.
- Airtabs are unique Vortex Generators. They are small, lightweight and are made from Automotive grade polymer which can be painted if required.
- Each Airtab® is fitted with Grade 'A' automotive adhesive tape, offering an easy 'peel and stick' application.
- Airtabs® have been tested and proven over millions of road miles worldwide. Enduring extremes of climatic conditions they have proved to be durable, long lasting and maintenance free.
- Easy to fit and handle.
- Helps to keep the rear of the vehicle clean.
- Users can enhance their 'green' credentials as a result of fitting Airtabs®.

HOW AIRTABS® WORK

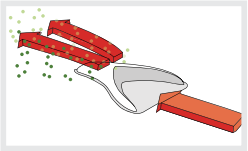

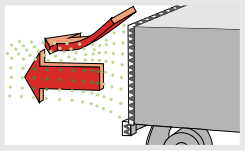

Each Airtab produces two counter rotating vortices, each approximately 4 to 5 times the height of the Airtab and several feet in length.
These tight swirls of air 'bridge the gap' between tractor and trailer and let air flow smoothly away from the vehicle.
Airtab helps to reduce the drag at the rear of the vehicle by spinning the air as it leaves. Each vortex lasts several feet in length, keeping the airflow controlled and restricting it from becoming turbulent. This allows the vehicle to move forward more easily as it encounters less drag. The result is a reduction in required energy (fuel) to maintain the required speed.

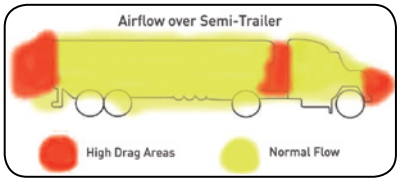

The example above clearly shows the airflow and high drag area around an un-fitted unit

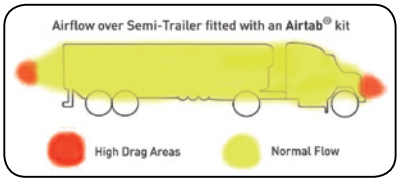

The example above clearly shows that Airtabs target and reduce drag at two locations: the gap between tractor/trailer and the rear of the trailer

Operators are reporting a significant fuel saving of between 3-5% on rigid trucks & trailers

Welwyn Garden City tel +44 (0)1707 371161 fax +44 (0)1707 372603
Coseley tel +44 (0)121 520 0100 fax +44 (0)121 522 3889
website www.cbf.uk.com e-mail: sales@cbf.uk.com

BODY MOUNTING FITTINGS

Universal Body Mounting Bracket

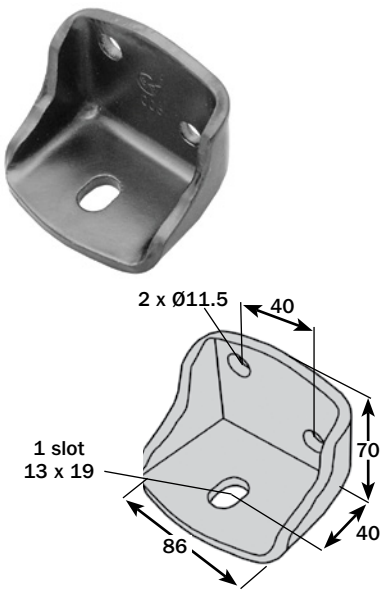

No. ABMB006
wgt. 0.43kg

- For use on chassis with 75 or 100mm runners
- Epoxy coated 5mm pressed steel

Universal Body Mounting Bracket

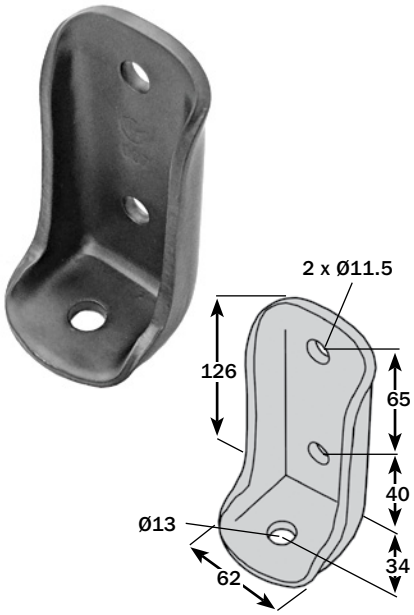

No. ABMB007
wgt. 0.45kg

- For use on chassis with 125mm runners
- Epoxy coated 6mm pressed steel

Universal Body Mounting Bracket

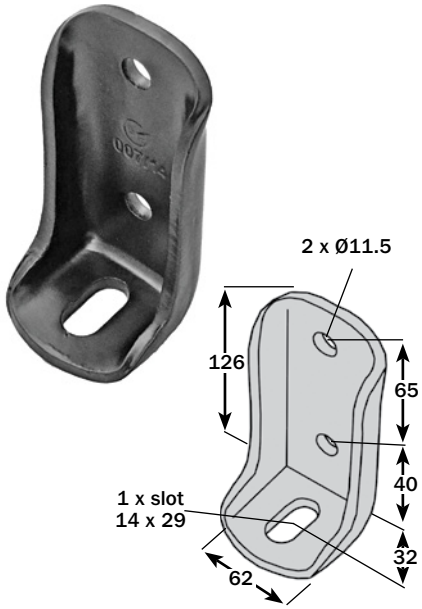

No. ABMB007/14
wgt. 0.45kg

- For use on chassis with 125mm runners
- Epoxy coated 6mm pressed steel

Universal Body Mounting Bracket

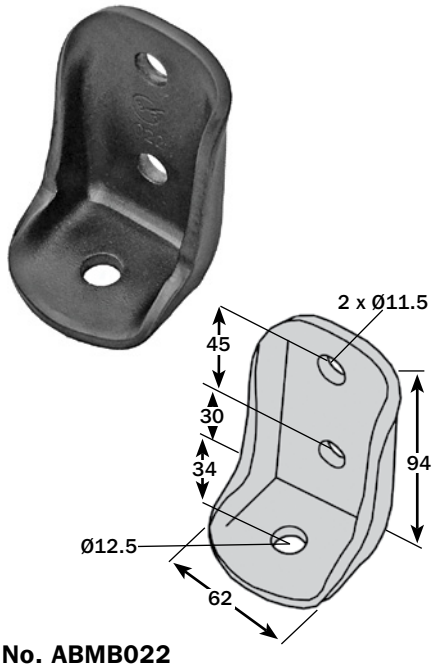

No. ABMB022
wgt. 0.35kg

- For use on chassis with 100mm runners
- Epoxy coated 6mm pressed steel

Universal Body Mounting Bracket

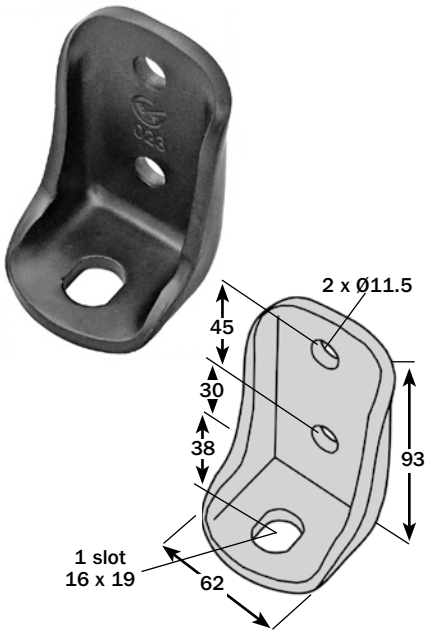

No. ABMB023
wgt. 0.36kg

- For use on chassis with 100mm runners
- Epoxy coated 6mm pressed steel

Universal Body Mounting Bracket

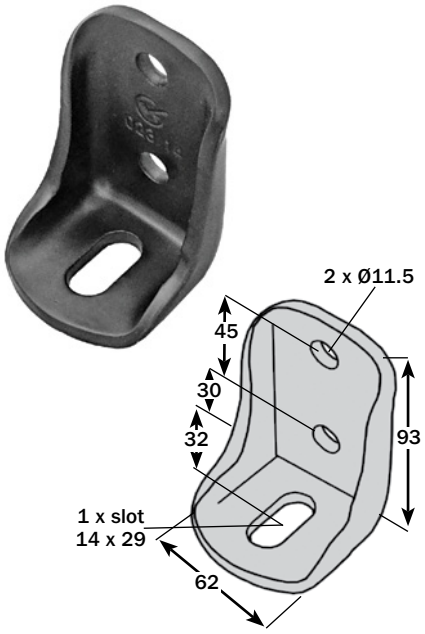

No. ABMB023/14
wgt. 0.36kg

- For use on chassis with 100mm runners
- Epoxy coated 6mm pressed steel

Welwyn Garden City tel +44 (0)1707 371161 fax +44 (0)1707 372603
Coseley tel +44 (0)121 520 0100 fax +44 (0)121 522 3889
website www.cbf.uk.com e-mail: sales@cbf.uk.com

BODY MOUNTING FITTINGS

Universal Body Mounting Bracket

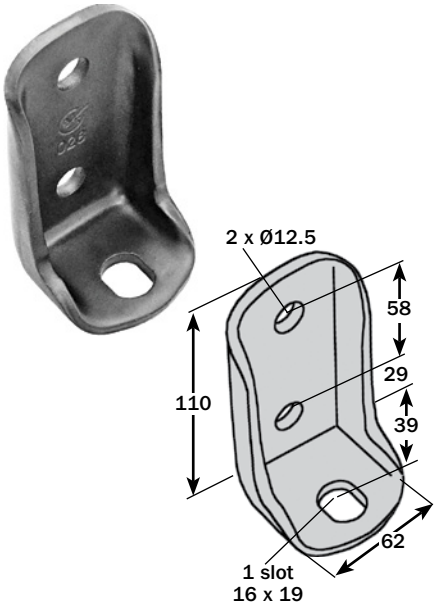

No. ABMB028
wgt. 0.40kg

- For use on chassis with 125mm and 150mm runners
- Epoxy coated 6mm pressed steel

Universal Body Mounting Bracket

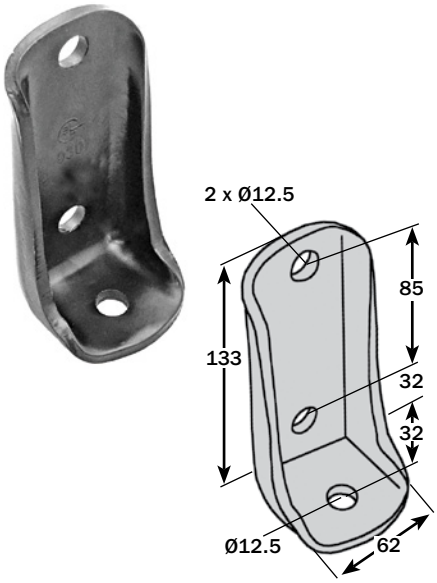

No. ABMB030
wgt. 0.43kg

- For use on chassis with 150mm runners
- Epoxy coated 6mm pressed steel

Universal Body Mounting Bracket

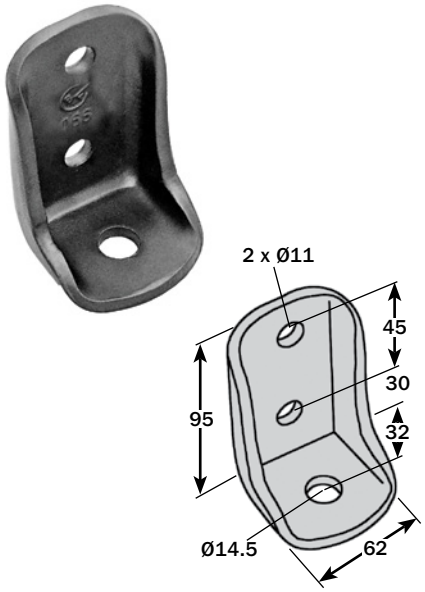

No. ABMB066
wgt. 0.35kg

- For use on chassis with 100mm runners.
- Epoxy coated 6mm pressed steel

Universal Body Mounting Bracket

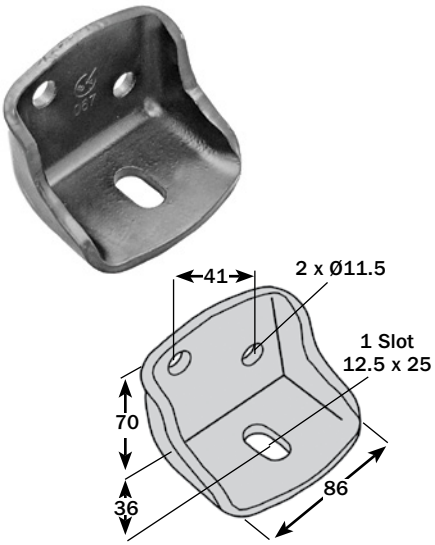

No. ABMB067
wgt. 0.42kg

- For use on chassis with 75mm runners
- Epoxy coated 6mm pressed steel

Universal Body Mounting Bracket

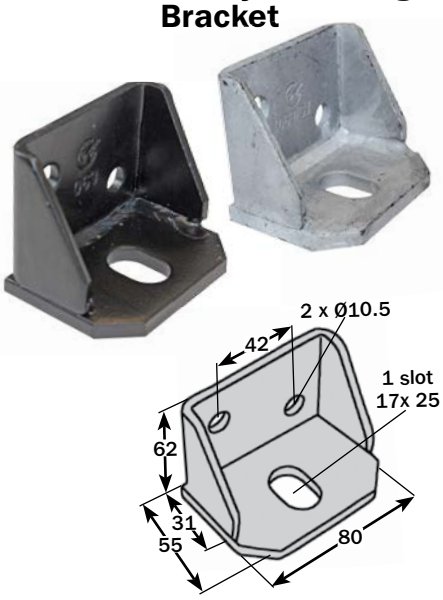

No. ABMB069 Black painted
No. ABMB069/GV Galvanized
wgt. 0.51kg

- For use on chassis with 75-100mm runners
- 5mm fabricated steel
- Epoxy coated or galvanized finish

Universal Body Mounting Bracket

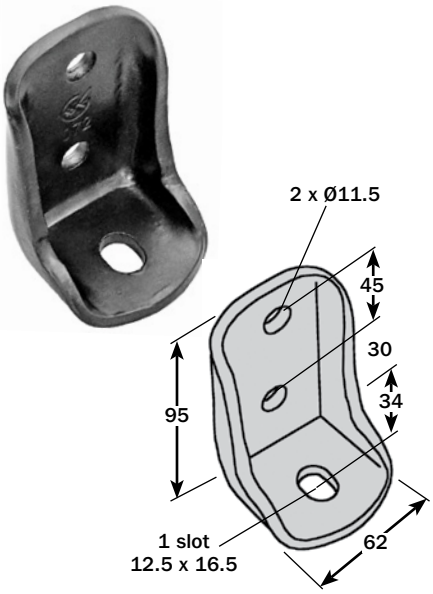

No. ABMB072
wgt. 0.36kg

- For use on chassis with 100mm runners
- Epoxy coated 6mm pressed steel

BODY MOUNTING FITTINGS

Mercedes/Volkswagen
Body Mounting Bracket
Inner longitudinal bracket suits Mercedes Sprinter & Volkswagen Crafter 3.5 tonne GVW

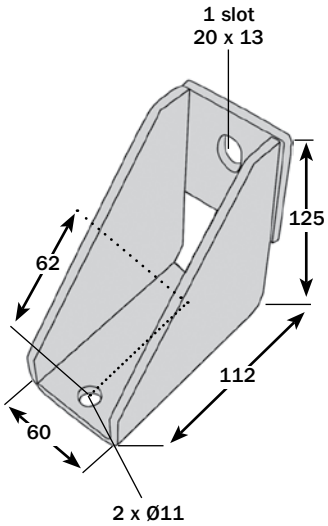

No. ABMB075/125GV
wgt. 1.17kg

- Galvanized 6mm fabricated steel
- Suits 125mm runner – ***Check for suitability***

Works in conjunction with
ABMB007/14

Body Mounting Channel

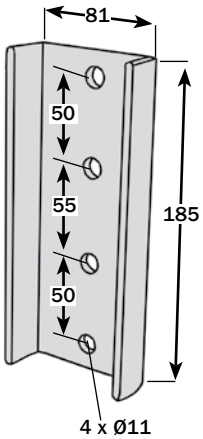

No. ABMB18581/BLK
wgt. 1.02kg

- Epoxy coated 5mm steel

Mercedes Sprinter/Volkswagen Crafter 2006 onwards
Upper Body Mounting Bracket

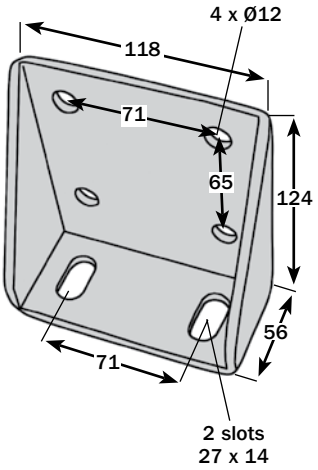

No. ABMB088/MV
wgt. 0.80kg

- Suits 125mm runner
- Epoxy coated 6mm steel
- Standard Chassis: Suits the first 2 mountings on each side of the chassis directly behind the cab
- Double cab: Suits the first mountings on each side of the chassis directly behind the cab – ***Check for suitability***

Welwyn Garden City tel +44 (0)1707 371161 fax +44 (0)1707 372603
Coseley tel +44 (0)121 520 0100 fax +44 (0)121 522 3889
website www.cbf.uk.com e-mail: sales@cbf.uk.com

BODY MOUNTING FITTINGS

DAF Upper Initial Front
Body Mounting Bracket

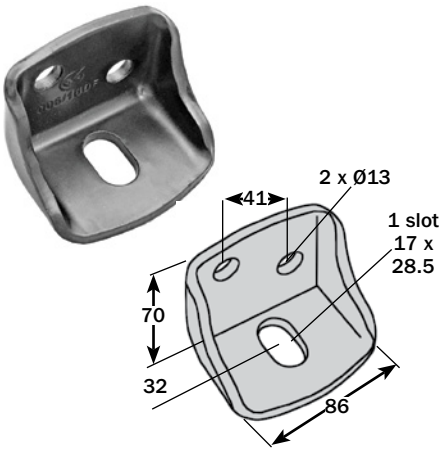

No. ABMB006/16DF
wgt. 0.43kg

- For use on chassis with 100 & 125mm runners
- Epoxy coated 6mm pressed steel
- Suits LF Range Euro 4, 5 & 6
  Check for suitability

It is recommended that 16mm HT bolts are used to connect the upper & lower brackets

DAF Upper Intermediate
Body Mounting Bracket

No. ABMB007/16DF
wgt. 0.45kg

- For use on chassis with 125mm runners
- Epoxy coated 6mm pressed steel
- Suits LF Range Euro 4, 5 & 6
  Check for suitability

It is recommended that 16mm HT bolts are used to connect the upper & lower brackets

DAF Upper Intermediate
Body Mounting Bracket

No. ABMB023/16DF
wgt. 0.36kg

- For use on chassis with 100mm runners
- Epoxy coated 6mm pressed steel

It is recommended that 16mm HT bolts are used to connect the upper & lower brackets

Body Mounting Spring & Washer Set

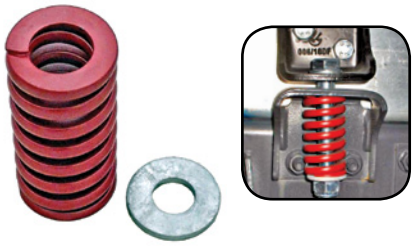

No. ABMB044/SPR 1 x Spring
wgt. 0.28kg 1 x Washer
Spring: 76 x Ø39 x 21.5mm i/d
Red painted
Washer: 4 x Ø36 x 16.5mm i/d
Galvanized finish

ABMB044/WA/GV
4 x Ø36mm x 16.5mm i/d

- Washer only

Where required, spring & washer to be fitted to the first and second mountings on each side of the chassis.

! To achieve the recommended pre-load, the spring must be tightened/reduced to a length of 70mm

DAF Lower (Front)
Body Mounting Bracket

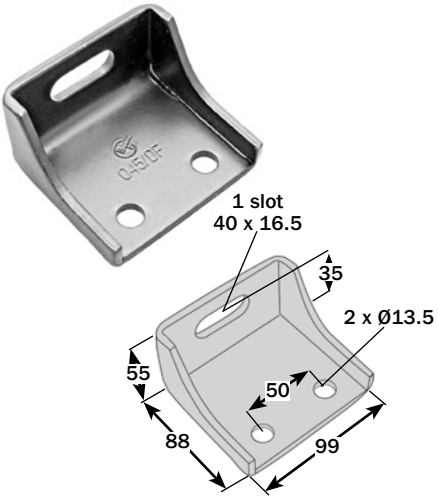

No. ABMB045/DF
wgt. 0.71kg

- Epoxy coated 6mm fabricated steel
- Suits LF Range Euro 4, 5 & 6
  Check for suitability

It is recommended that 16mm HT bolts are used to connect the upper & lower brackets

DAF
Guide Plate

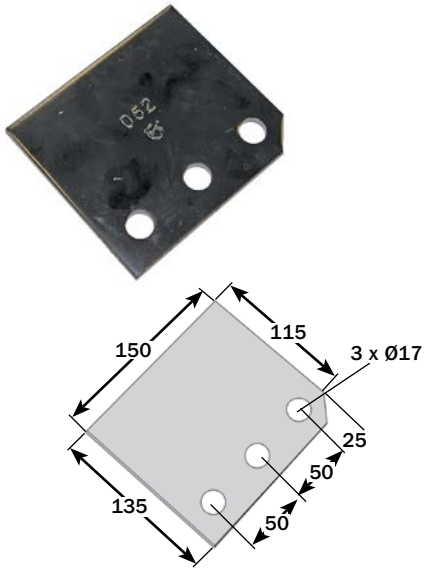

No. ABMB52
wgt. 1.17kg

- To suit LF Range Euro 4, 5 & 6
  Check for suitability
- Epoxy coated 8mm steel

BODY MOUNTING FITTINGS

DAF
Retainer Plate (weld on)

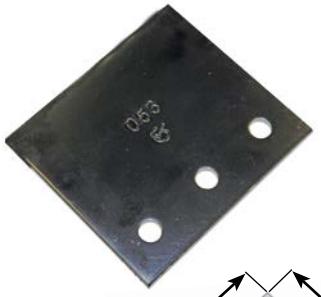

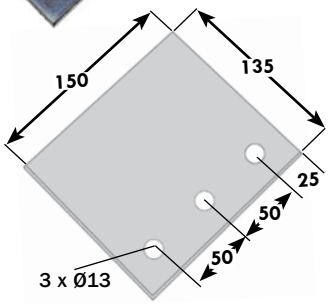

No. ABMB53
wgt. 1.20kg

- Suits LF Range Euro 4, 5 & 6
  Check for suitability
- Epoxy coated 8mm steel

To be used when a rigid joint between the chassis & body subframe is required (i.e. fitment of tail lift)

DAF
Retainer Plate (bolt on)

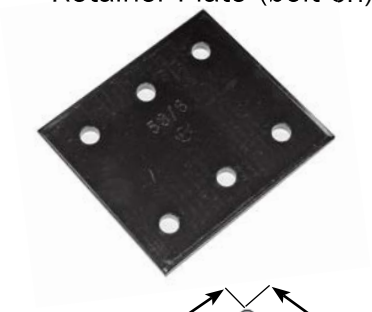

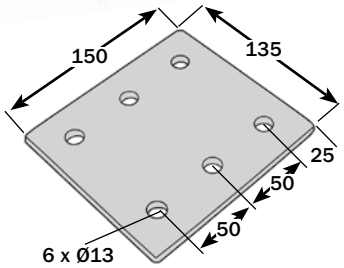

No. ABMB53/6
wgt. 1.18kg

- Suits LF Range Euro 4, 5 & 6
  Check for suitability
- Epoxy coated 8mm steel

To be used when a rigid joint between the chassis & body subframe is required (i.e. fitment of tail lift)

DAF
Body Mounting Bracket

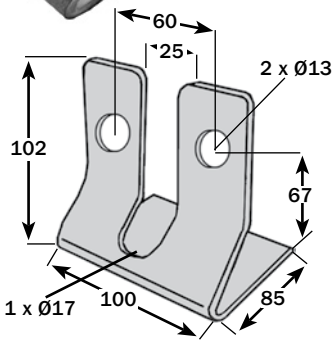

No. ABMB550/DF
wgt. 0.98kg

- To suit various older LF55 & 65, CF65, 75, 85 – ***check for suitability***
- Epoxy coated 8mm pressed steel

DAF
Mounting Bracket

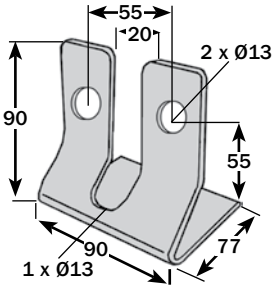

No. ABMB551/DF
wgt. 0.44kg

- To suit older LF45 Series
  Check for suitability
- Epoxy coated 5mm pressed steel

DAF
Tie Bar (LF55 & 65, CF65, 75, 85)

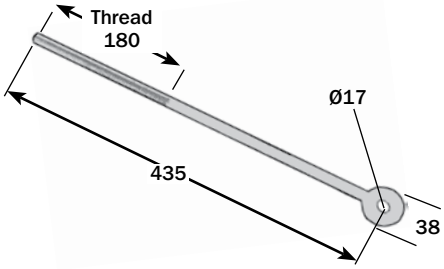

No. ABMB754 435mm
wgt. 0.62kg

- Bolt on Ø16mm
- Gold passivate finish
- Suitable for use with No. **ABMB550/DF**

DAF
Tie Bar (LF45 Series)

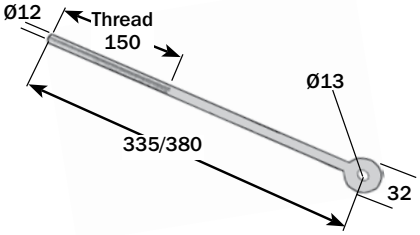

No. ABMB755 380mm
wgt. 0.32kg

No. ABMB755/335 335mm
wgt. 0.28kg

- Bolt on Ø12mm
- Gold passivate finish
- Suitable for use with No. **ABMB551/DF**

Welwyn Garden City tel +44 (0)1707 371161 fax +44 (0)1707 372603
Coseley tel +44 (0)121 520 0100 fax +44 (0)121 522 3889
website www.cbf.uk.com e-mail: sales@cbf.uk.com

BODY MOUNTING FITTINGS

DAF Lower
Body Mounting Bracket

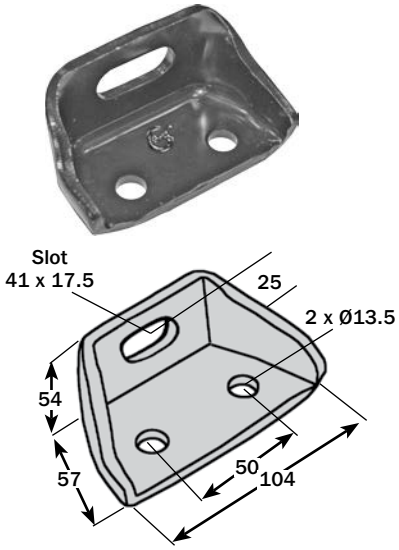

No. ABMB062/DF
wgt. 0.88kg

- Suits various LF Euro 6 Range
  Check for suitability
- Epoxy coated 6mm pressed steel

It is recommended that HT bolts are used to connect the upper & lower brackets

Body Mounting Bracket

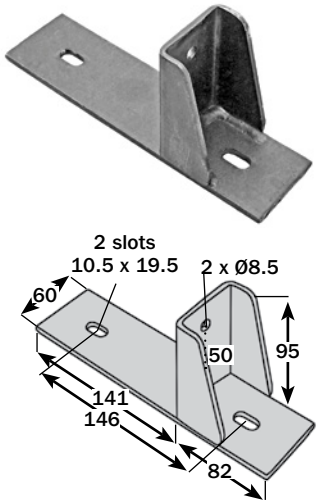

No. ABMB705B
wgt. 0.86kg

- Suitable for Citroen Relay, Fiat Ducato, Peugeot Boxer, pre 2010 models – ***Check for suitability***
- To suit 100mm runner
- Epoxy coated 5mm fabricated steel

MAN/Mitsubishi/Renault
Body Mounting Bracket

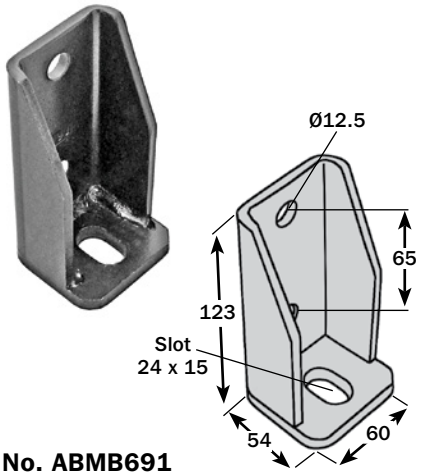

No. ABMB691
wgt. 0.64kg

- 17 tonne MAN Upper bracket Mitsubishi Canter lower bracket
- 17 tonne Renault Midlum upper bracket
- For use with 125 & 150mm runners with slotted hole
  Check for suitability
- Epoxy coated 6mm fabricated steel

Body Mounting Bracket

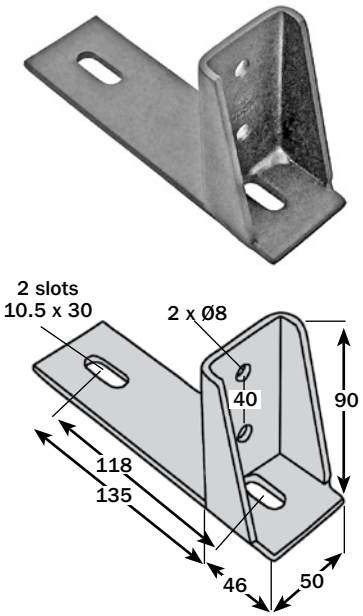

No. ABMB706A
wgt. 0.62kg

- Suitable for Ford Transit (pre-April 2000), Mercedes Sprinter, LDV
  Check for suitability
- Epoxy coated fabricated steel

Body Mounting Bracket

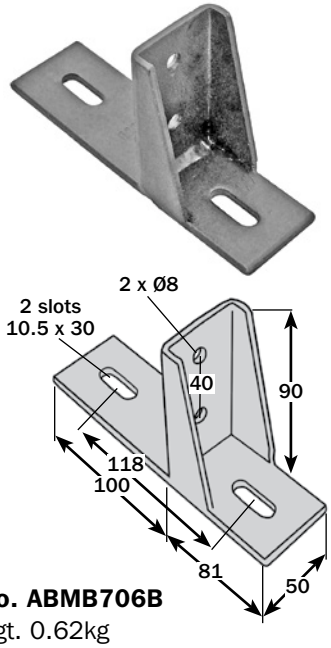

No. ABMB706B
wgt. 0.62kg

- Suitable for Ford Transit (pre-April 2000), Mercedes Sprinter, LDV, Volkswagen LT Range
  Check for suitability
- Epoxy coated fabricated steel

Body Mounting Bracket

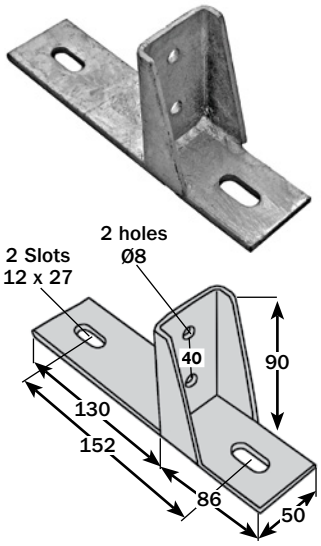

No. ABMB706B/90GV
wgt. 0.73kg

- Suitable for Renault Master, Vauxhall Movano, Citroen Relay, Fiat Ducato, Peugeot Boxer 2010 chassis onwards. To suit 100mm runners – ***Check for suitability***
- Galvanized fabricated steel

BODY MOUNTING FITTINGS

Body Mounting Bracket

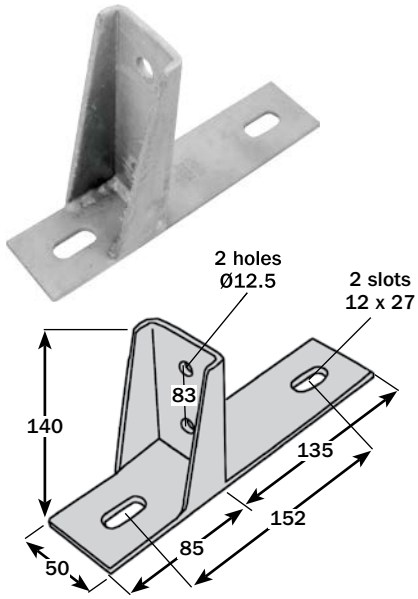

No. ABMB706B/140GV
wgt. 0.89kg

- Suitable for Renault Master and Vauxhall Movano. To suit 150mm runners – ***Check for suitability***
- Galvanized fabricated steel

Body Mounting Bracket

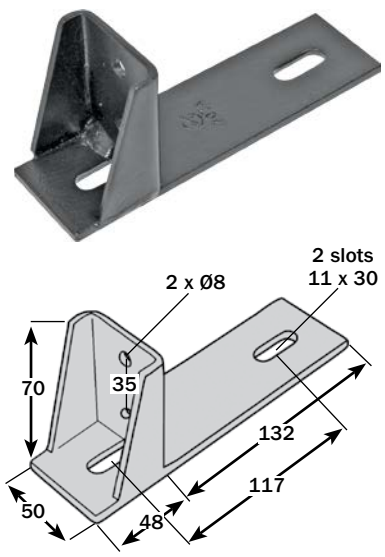

No. ABMB707A
wgt. 0.60kg

- Suitable for Ford Transit (Pre-April 2000), Mercedes Sprinter, LDV, Volkswagen LT Range
  Check for suitability
- Epoxy coated fabricated steel

Body Mounting Bracket

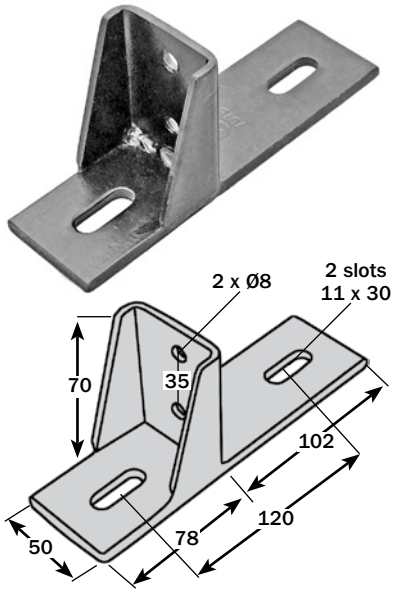

No. ABMB707B
wgt. 0.60kg

- Suitable for Ford Transit (Pre-April 2000), Mercedes Sprinter, LDV, Volkswagen LT Range
  Check for suitability
- Epoxy coated fabricated steel

Body Clamp

No. ABMB760/36GV Size: 126 x 51mm
wgt. 0.54kg
Suits chassis thickness 3-4mm & 5-6mm

- 28 x 15.5mm slotted hole
- Diamond / Patterned face
- Drop forged steel, galvanized

No. ABMB760/36 Size: 126 x 47mm
wgt. 0.54kg
Suits chassis thickness 3-4mm & 5-6mm

- 27 x 17.0mm slotted hole
- Drop forged steel, galvanized

No. ABMB760/48 Size: 125 x 51mm
wgt. 0.83kg
Suits chassis thickness 4-5mm & 5-8mm

- 24 x 14.5mm slotted hole
- Drop forged steel, galvanized

No. ABMB760/712 Size 125 x 51mm
wgt. 0.70kg
Suits chassis thickness 7-8mm & 10-12mm

- 24 x 14.5mm slotted hole
- Drop forged steel, galvanized

No. ABMB760/1016 Size: 129 x 60mm
wgt. 0.96kg
Suits chassis thickness 10-12mm & 14-16mm

- 24 x 16.5mm slotted hole
- Drop forged steel, galvanized

Welwyn Garden City tel +44 (0)1707 371161 fax +44 (0)1707 372603
Coseley tel +44 (0)121 520 0100 fax +44 (0)121 522 3889
website www.cbf.uk.com e-mail: sales@cbf.uk.com

BODY MOUNTING FITTINGS

Mercedes Atego Lower
Body Mounting Bracket

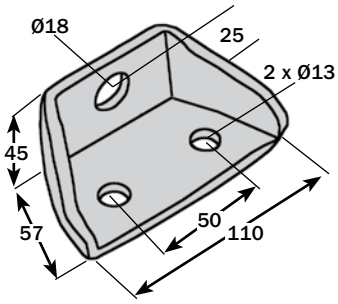

No. ABMB051
wgt. 0.34kg

- To suit Atego 816-1024 Atego 1218-1529
  Check for suitability
- Epoxy coated 6mm pressed steel

Mercedes Axor/Actros Lower
Body Mounting Bracket

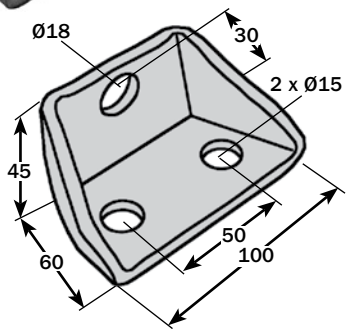

No. ABMB058
wgt. 0.33kg

- To suit Axor 1824-2633 Actros 1832L-2560L
  Check for suitability
- Epoxy coated 6mm pressed steel

Mercedes Atego Lower
Front Body Mounting Bracket

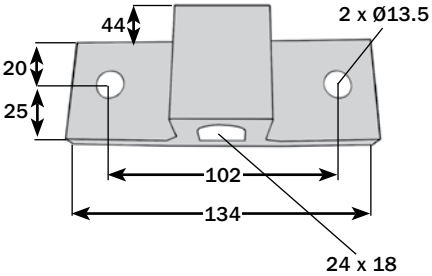

No. ABMB080
wgt. 0.72kg

- To suit Atego 816-1024 Atego 1218-1529
  Check for suitability
- Epoxy coated 10mm fabricated steel

Mercedes Atego
Attachment Plate

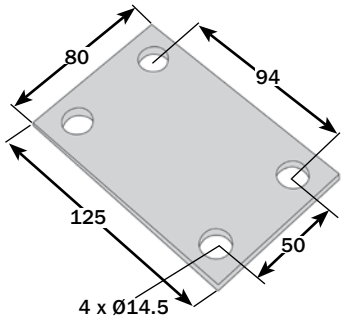

No. ABMB082
wgt. 0.59kg

- To suit Atego 816-1024
  Check for suitability
- Epoxy coated 8mm steel

Mercedes Atego
Guide Plate

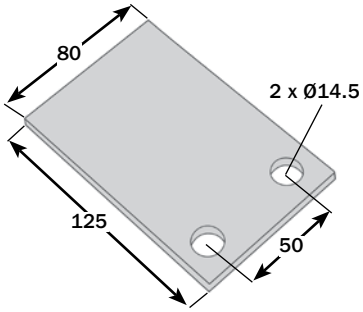

No. ABMB083
wgt. 0.61kg

- To suit Atego 816-1024
  Check for suitability
- Epoxy coated 8mm steel

Mercedes Atego
Guide Plate

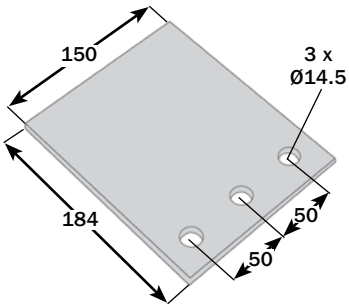

No. ABMB084
wgt. 1.66kg

- To suit Atego 1218-1529
  Check for suitability
- Epoxy coated 8mm steel

BODY MOUNTING FITTINGS

Mercedes Atego
Attachment Plate

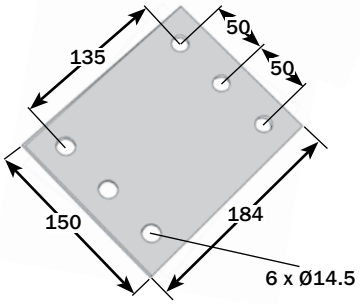

No. ABMB085
wgt. 1.62kg

- To suit Atego 1218-1529
  Check for suitability
- Epoxy coated 8mm steel

Mercedes Axor/Actros
Guide Plate

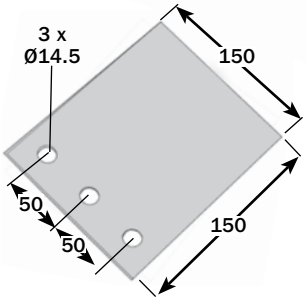

No. ABMB086
wgt. 1.31kg

- To suit Axor 1824-2633 Actros 1832L-2560L – ***Check for suitability***
- Epoxy coated 8mm steel

Mercedes Axor/Actros
Attachment Plate

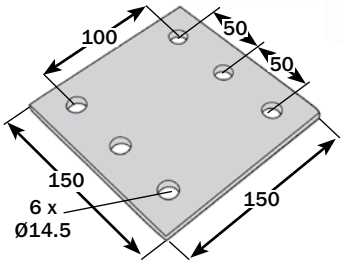

No. ABMB087
wgt. 1.31kg

- To suit Axor 1824-2633 Actros 1832L-2560L – ***Check for suitability***
- Epoxy coated 8mm steel

Body Mounting Spring

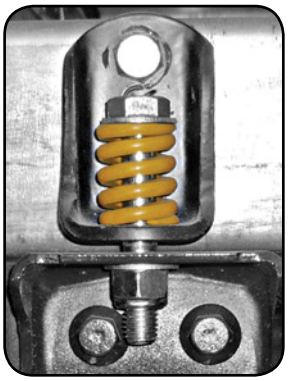

Mounted Photo

No. ABMB0237/SPR Yellow painted
wgt. 0.11kg
Spring: Outer diameter 44 x 31mm
Inner diameter 16.5mm

- Suits all Mercedes Atego/Axor/Actros chassis (except tippers) spring to be fitted to the first mounting brackets on each side of the chassis directly behind the cab.
- Suits Mercedes, Iveco chassis and Isuzu chassis
- Suitable for use with **ABMB023/14**, **ABMB007/14** & **ABMB051/14/IZU** Mounting Brackets
- ***To achieve recommended pre-load the spring must be tightened/reduced to a length of 38mm (approx. 6mm). Check for suitability***

P58-62

P220-229

Welwyn Garden City tel +44 (0)1707 371161 fax +44 (0)1707 372603
Coseley tel +44 (0)121 520 0100 fax +44 (0)121 522 3889
website www.cbf.uk.com e-mail: sales@cbf.uk.com

BODY MOUNTING FITTINGS

Iveco
Chassis Bracket

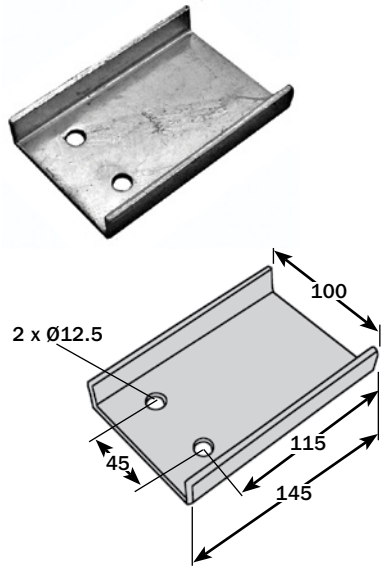

No. ABMB695/IV
wgt. 0.88kg

- To suit chassis to runner
- Can be welded to steel runner or bolted to aluminium runner
  Check for suitability
- Galvanized 6mm pressed steel

Iveco
Chassis Bracket

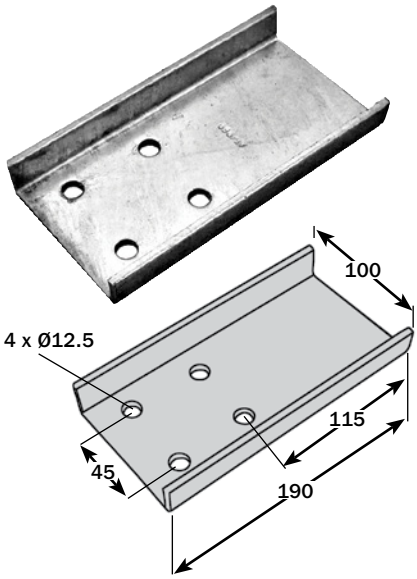

No. ABMB696/IV
wgt. 1.13kg

- To suit chassis to runner
- Can be welded to steel runner or bolted to aluminium runner
  Check for suitability
- Galvanized 6mm pressed steel

Iveco/Cargo
Upper Pedestal Bracket

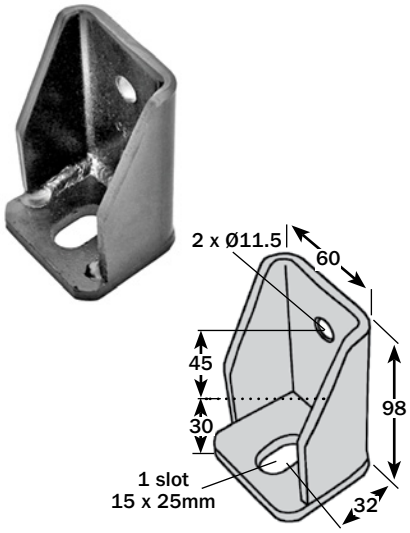

No. ABMB692
wgt. 0.56kg

- For use on chassis with 100mm runners
  Check for suitability
- Epoxy coated 6mm fabricated steel

Disc Spring Washer

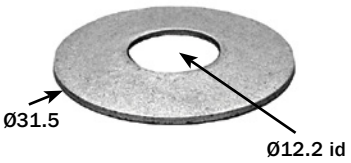

No. ABMB03
wgt. 0.50kg/100

- 1mm Zinc plated steel

Disc Spring Washer

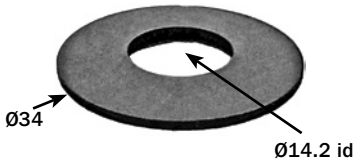

No. ABMB03/14
wgt. 0.80kg/100

- 1.5mm Phospheric coated steel

Isuzu
Chassis Bracket

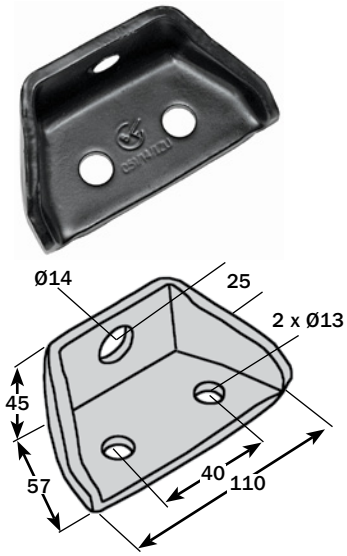

No. ABMB051/14/IZU
wgt. 0.34kg

- Suits Grafter chassis
- To suit chassis to runner
  Check for suitability
- Epoxy coated 6mm pressed steel

BODY MOUNTING FITTINGS

Ford Transit
Body Mounting Bracket

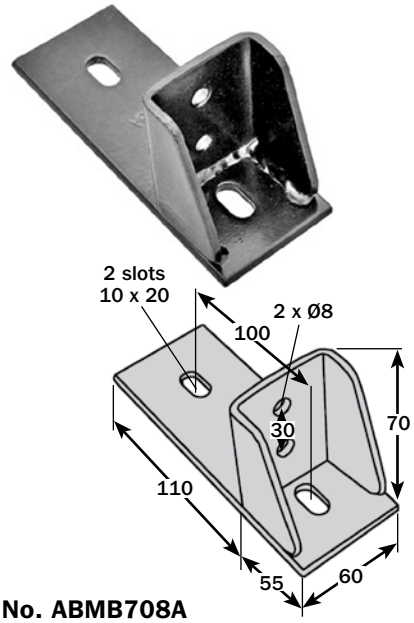

No. ABMB708A
wgt. 0.65kg

- To suit 75mm runners on all new transits from April 2000
  Check for suitability
- Epoxy coated fabricated steel

Ford Transit
Body Mounting Bracket

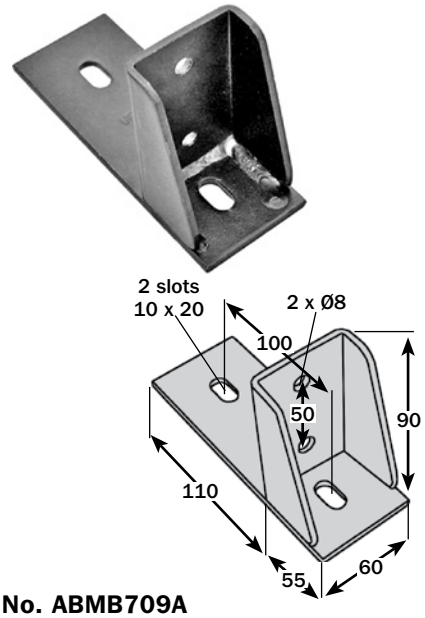

No. ABMB709A
wgt. 0.72kg

- To suit 100mm runners on all new transits from April 2000
  Check for suitability
- Epoxy coated fabricated steel

Ford Transit
Base Plate

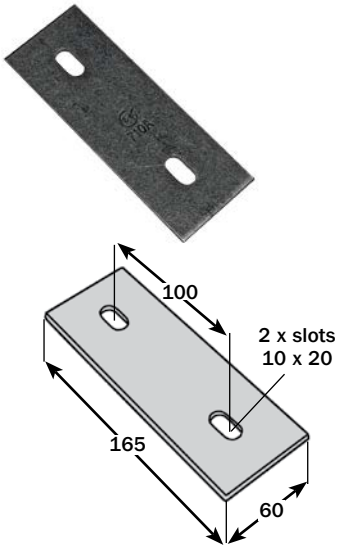

No. ABMB710A
wgt. 0.38kg

- To suit all new transits from April 2000
  Check for suitability
- Self colour 5mm steel

Volvo FM Series
Upper Body Mounting Bracket

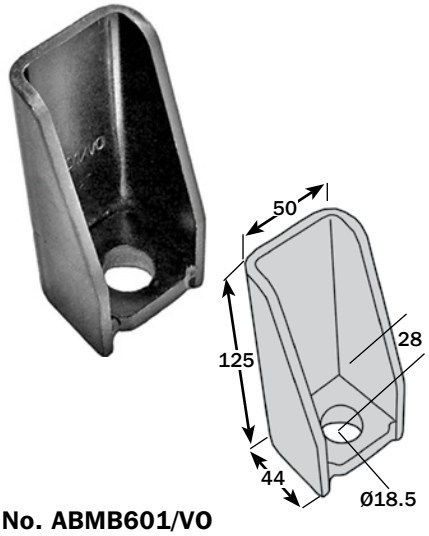

No. ABMB601/VO
wgt. 0.64kg

- Weld on
- Models FL4, FL6, FL7 & FL10
- For use on steel sub-frame, rigid type bodies
  Check for suitability
- Epoxy coated 5mm fabricated steel

Volvo
Lower Body Mounting Bracket

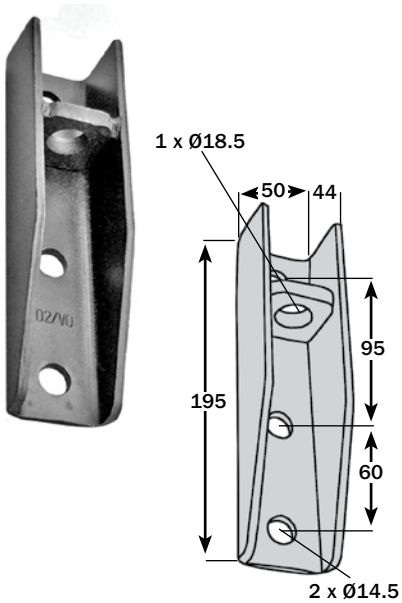

No. ABMB602/VO
wgt. 0.92kg

- Models FL616, FL7 & FL10
  Check for suitability
- Epoxy coated 5mm fabricated steel

Volvo FM Series
Upper Body Mounting Bracket

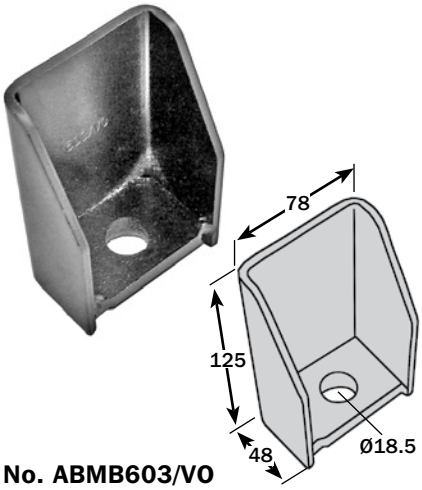

No. ABMB603/VO
wgt. 0.97kg

- Models FL4, FL6, FL7 & FL10
- For use on steel sub-frame, rigid type bodies
- For use with Nos. **ABMB6037RP/VO** & **ABMB6037WA/VO**
  Check for suitability
- Epoxy coated 5mm fabricated steel

Welwyn Garden City tel +44 (0)1707 371161 fax +44 (0)1707 372603
Coseley tel +44 (0)121 520 0100 fax +44 (0)121 522 3889
website www.cbf.uk.com e-mail: sales@cbf.uk.com

BODY MOUNTING FITTINGS

Volvo FM Series
Rubber Pad & Washer

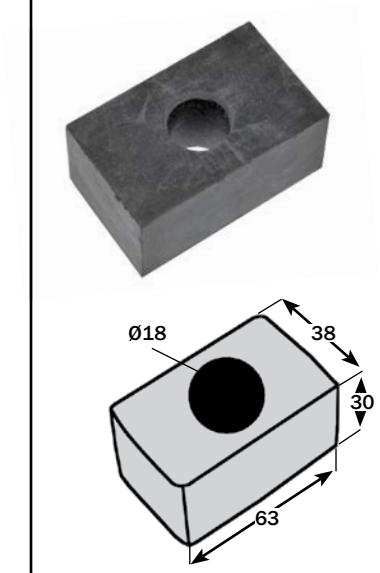

No. ABMB6037RP/VO
wgt. 0.10kg

- For use with Nos. **ABMB603/VO** & **ABMB607/VO**
- Natural rubber, black

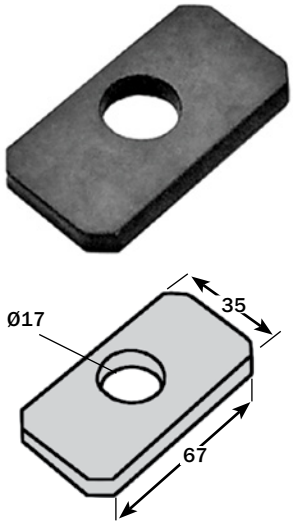

No. ABMB6037WA/VO
wgt. 0.12kg

- For use with Nos. **ABMB603/VO** & **ABMB607/VO**
- Epoxy coated 8mm steel

Volvo FM Series
Lower Mounting Bracket

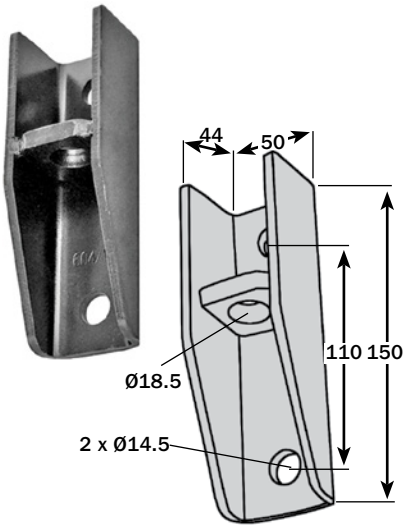

No. ABMB604/VO
wgt. 0.75kg

- Bolt on
- Models FL4, FL612 & FL614
- All body types
  Check for suitability
- Epoxy coated 5mm fabricated steel

Volvo FM Series
Lower Mounting Bracket

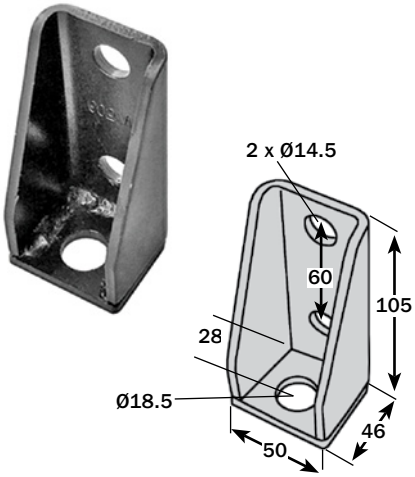

No. ABMB605/VO
wgt. 0.46kg

- Models FL618 & FS7
- A lower mounting bracket is recommended for pivoted and one way flexible mountings on the FL618 & FS7 rigid trucks
  Check for suitability
- Epoxy coated 5mm fabricated steel

Volvo FL/FM Series
Upper Mounting Bracket

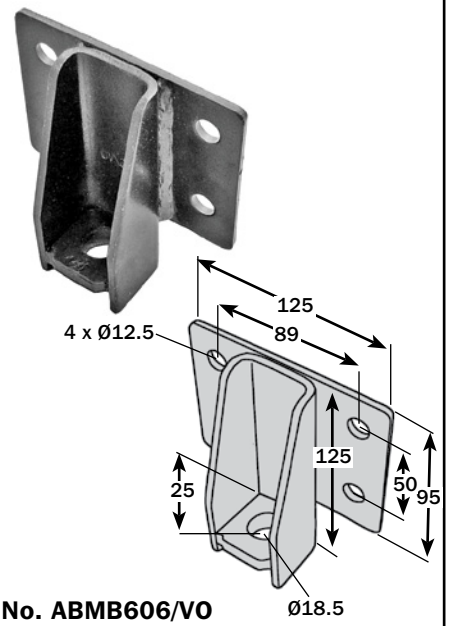

No. ABMB606/VO
wgt. 1.12kg

- For use on aluminium sub-frame rigid type bodies
  Check for suitability
- Epoxy coated 5mm fabricated steel

Volvo FM Series
Upper Mounting Bracket

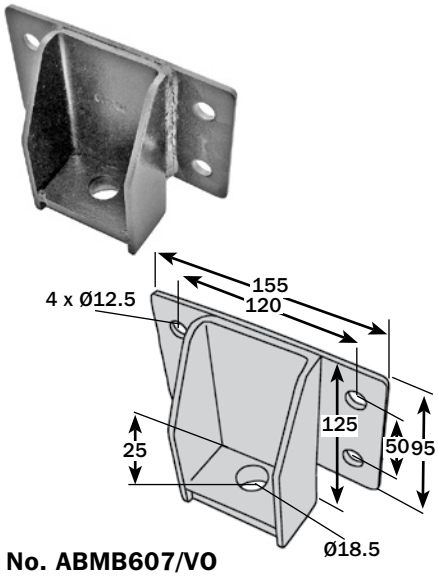

No. ABMB607/VO
wgt. 1.50kg

- Models FL6, FL7 & FL10
- For use on aluminium sub-frame
- Flexible type bodies
  Check for suitability
- Epoxy coated 5mm fabricated steel

BODY MOUNTING FITTINGS

Volvo FM/FH Series
Upper Body Mounting Bracket

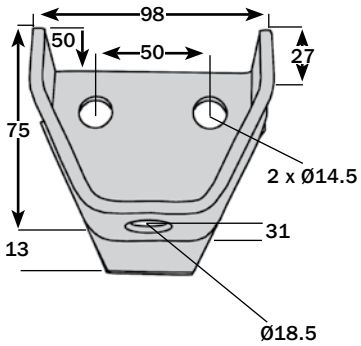

No. ABMB608/VO
wgt. 0.73kg

- Epoxy coated 6mm fabricated steel – ***Check for suitability***

Volvo FE/FL Series
Upper Body Mounting Bracket

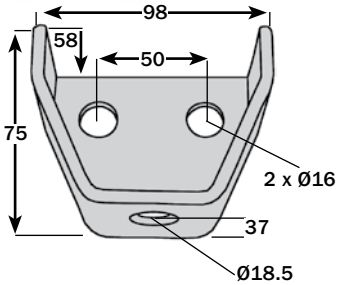

No. ABMB609/VO
wgt. 0.75kg

- To suit models FE, FL240 & FL280
- For use with semi rigid & rigid attachments
  Check for suitability
- Epoxy coated 6mm fabricated steel

Volvo FE/FL Series
Flexible Attachment Set

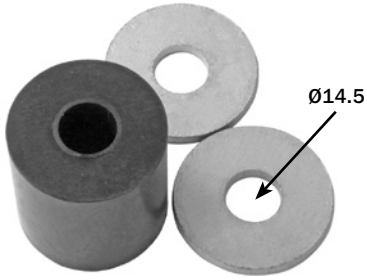

No. ABMB609/RP/VO
wgt. 0.14kg per set
Rubber Pad: H40 x Ø40mm
Washers: 2 x Ø43 x 4.0mm

- 80 Shore Hardness
- To suit models FE, FL240 & FL280
- For use with **ABMB609/VO**
- When tightened the rubber must be compressed 4mm
  Check for suitability
- Also suits Renault Midlum & Premium

Volvo
Attachment Plate

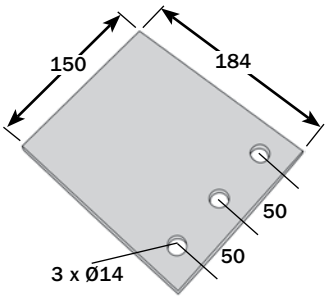

No. ABMB635/VO
wgt. 1.70kg

- Models FL4, FL6
- For use on steel sub-frame
- All body types – ***Check for suitability***
- Epoxy coated 8mm steel

Volvo
Attachment Plate

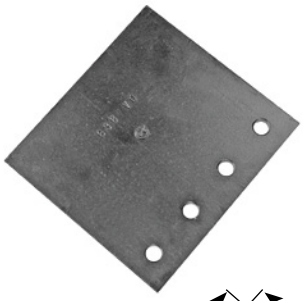

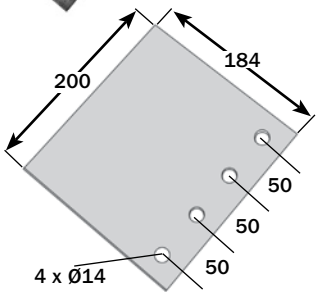

No. ABMB636/VO
wgt. 2.30kg

- Models FL7, FL10
- For use on steel sub-frame
- All body types – ***Check for suitability***
- Epoxy coated 8mm steel

Volvo FM/FH Series
Lower Attachment Plate

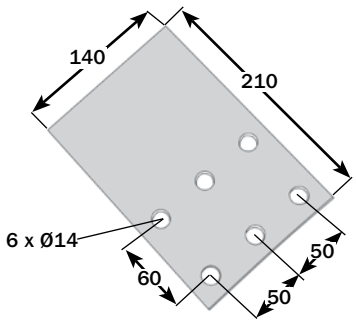

No. ABMB637/VO
wgt. 1.65kg

- Epoxy coated 8mm steel
  Check for suitability

Welwyn Garden City tel +44 (0)1707 371161 fax +44 (0)1707 372603
Coseley tel +44 (0)121 520 0100 fax +44 (0)121 522 3889
website www.cbf.uk.com e-mail: sales@cbf.uk.com

BODY MOUNTING FITTINGS

Volvo
Attachment Plate

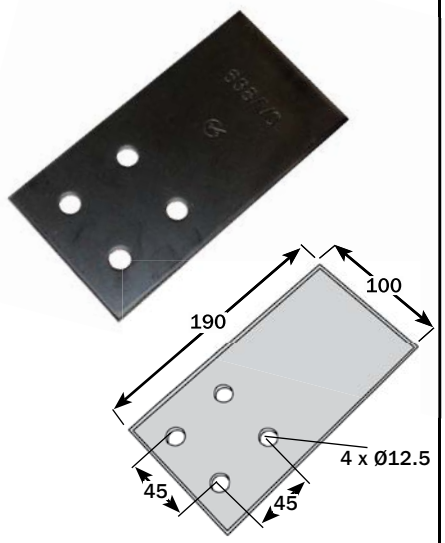

No. ABMB638/VO
wgt. 1.00kg

- To suit models FE, FL Series
  Check for suitability
- Epoxy coated 6mm fabricated steel

Scania
Series 4 & P, R, T Series
Upper Body Mounting Bracket
Rigid Fixing

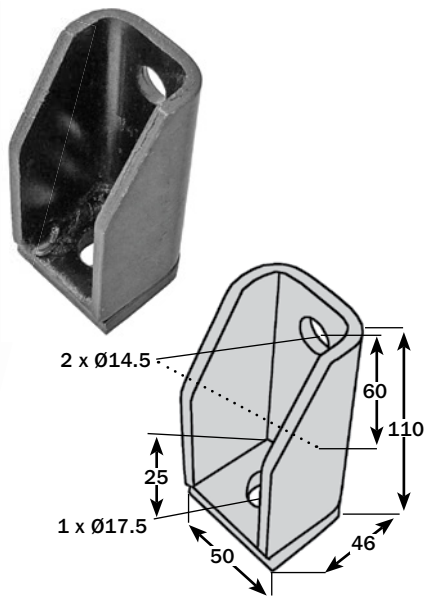

No. ABMB641/SCA
wgt. 0.57kg

- Epoxy coated 6mm fabricated steel – ***Check for suitability***

Scania
4 & P, R, T Series
Upper Body Mounting Bracket
Flexible Fixing

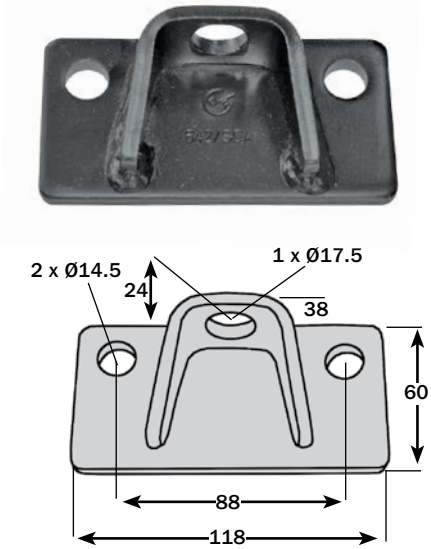

No. ABMB642/SCA
wgt. 0.55kg

- Bolt on
  Check for suitability
- Epoxy coated 7.5mm fabricated steel

Scania
4 & P, R, T Series
Upper Body Mounting Bracket
Flexible Fixing

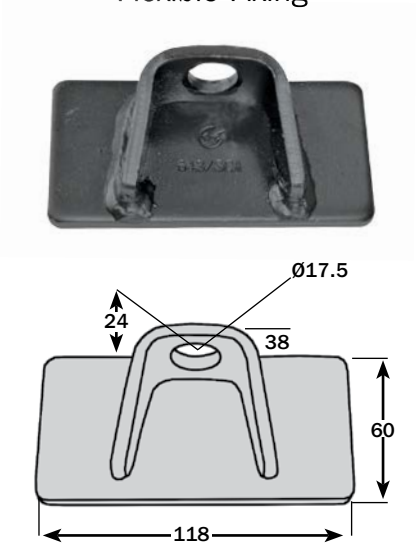

No. ABMB643/SCA
wgt. 0.57kg

- Weld on
  Check for suitability
- Epoxy coated 7.5mm fabricated steel

Scania
Series 4
Lower Body Mounting Bracket
Rigid Fixing

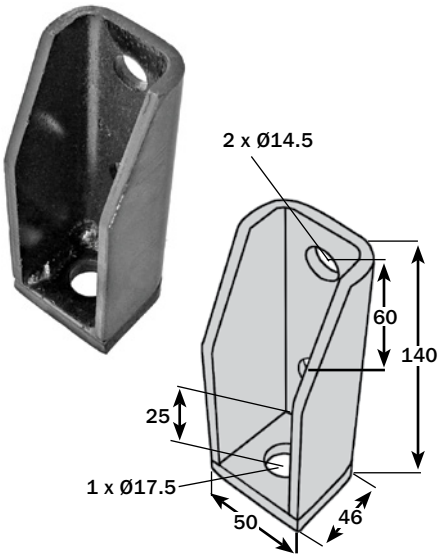

No. ABMB644/SCA
wgt. 0.71kg

- Epoxy coated 6mm fabricated steel – ***Check for suitability***

Scania
Series 4
Lower Body Mounting Bracket
Flexible Fixing

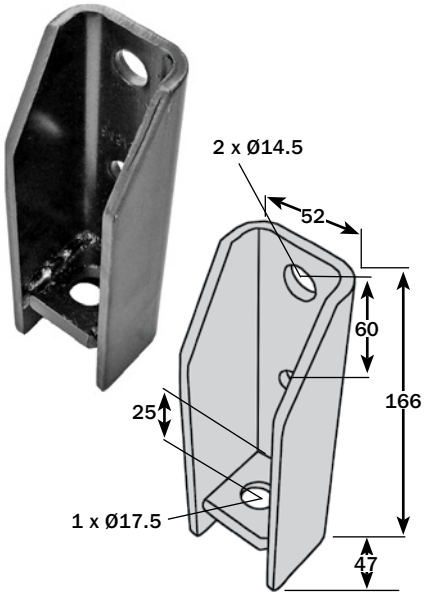

No. ABMB645/SCA
wgt. 0.85kg

- Epoxy coated 6mm fabricated steel – ***Check for suitability***

BODY MOUNTING FITTINGS

Scania Series 4
Attachment Plate

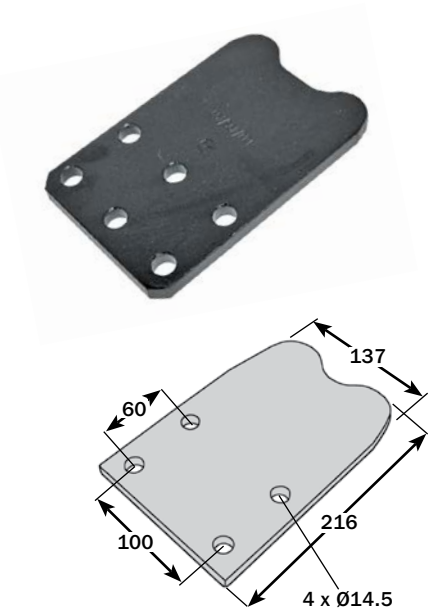

No. ABMB646/SCA
wgt. 2.65kg

- Bolt to chassis & weld to runner *Check for suitability*
- Epoxy coated 12mm steel

Scania Series 4
Attachment Plate

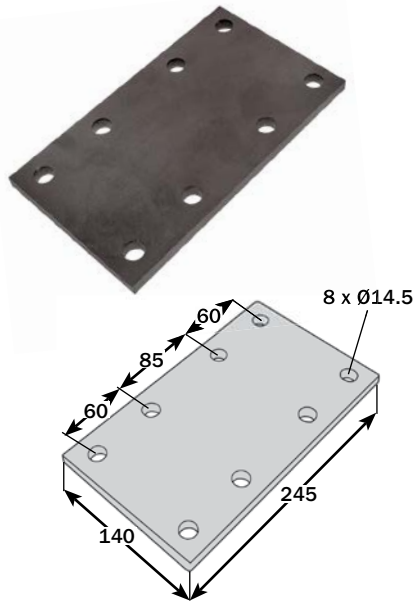

No. ABMB647/SCA
wgt. 3.05kg

- Chassis to runner attachment plate – *Check for suitability*
- Epoxy coated 12mm steel

Scania P, R, T Series
Lower Bracket
Rigid Fixing

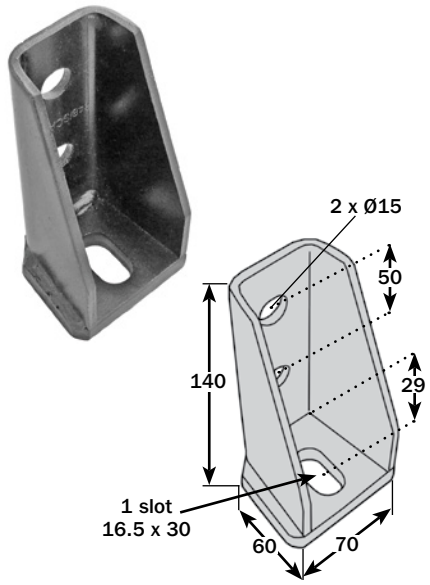

No. ABMB648/SCA/PRT
wgt. 0.91kg

- Epoxy coated 5mm fabricated steel – *Check for suitability*
- For use with **ABMB641/SCA**

Scania P, R, T Series
Lower Bracket
Flexible Fixing

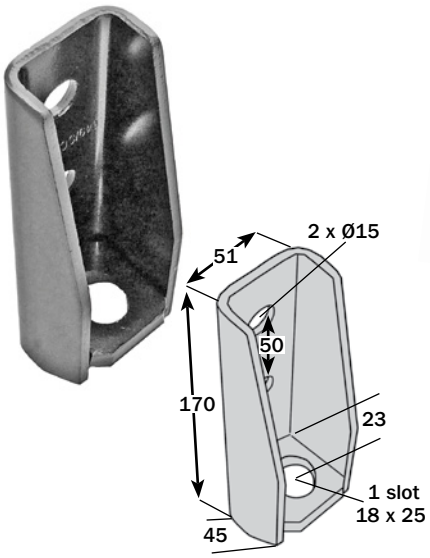

No. ABMB649/SCA/PRT
wgt. 0.81kg

- For use with **ABMB642/SCA** or **ABMB643/SCA** – *Check for suitability*
- Epoxy coated 5mm fabricated steel

Scania P, R, T Series
Attachment Plate

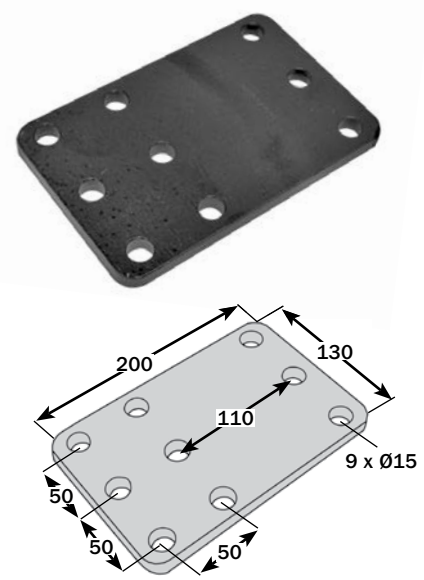

No. ABMB650/SCA/PRT
wgt. 2.33kg

- Chassis to runner attachment Plate – *Check for suitability*
- Epoxy coated 12mm steel

Scania P, R, T Series
Attachment Plate

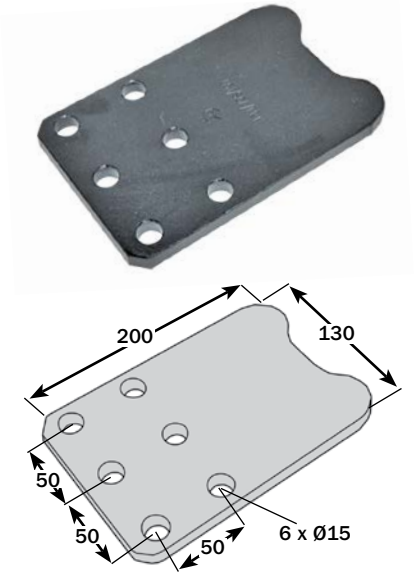

No. ABMB651/SCA/PRT
wgt. 2.33kg

- Chassis to runner attachment Plate – *Check for suitability*
- Epoxy coated 12mm steel

Welwyn Garden City tel +44 (0)1707 371161 fax +44 (0)1707 372603
Coseley tel +44 (0)121 520 0100 fax +44 (0)121 522 3889
website www.cbf.uk.com e-mail: sales@cbf.uk.com

BODY MOUNTING FITTINGS

Balata Belting
10 Metre Rolls
Balata Belting offers excellent weathering properties and resistance to ageing

No. ABMBB3/50 10mtr x 50mm x 3 ply
wgt. 2.95kg
No. ABMBB5/50 10mtr x 50mm x 5 ply
wgt. 3.94kg

- 3 ply approximately 3.75mm thick
- 5 ply approximately 7.00mm thick

Balata Belting
30 Metre Rolls
Balata Belting offers excellent weathering properties and resistance to ageing

No. ABMBB3/50/30 30mtr x 50mm x 3 ply
wgt. 6.36kg
No. ABMBB3/75/30 30mtr x 75mm x 3 ply
wgt. 9.54kg

- 3 ply approximately 3.75mm thick

Balata Packing Washer

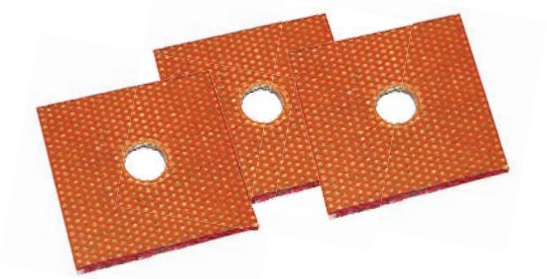

No. ABMBB3/SQ 50mm x 50mm x 3 ply
wgt. 0.014kg

- 1 x Ø12mm hole

Balata Packing Washer

No. ABMBB5/RD Ø50mm x 5 ply
wgt. 0.014kg

- 1 x Ø12mm hole

Balata Packing Washer

No. ABMBB3/68RD Ø68mm x 3 ply
wgt. 0.020kg
No. ABMBB3/85RD Ø85mm x 3 ply
wgt. 0.026kg

- 1 x Ø16mm hole
- Suits single bolt wing stay – *see page 159-160*

BODY MOUNTING FITTINGS

Bearer Cleat Plate
Universal
Galvanized Steel

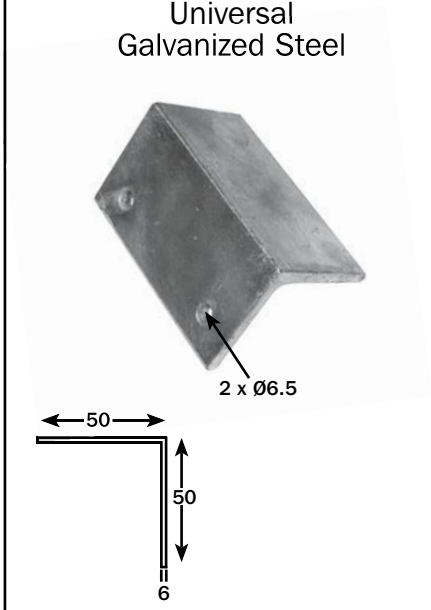

No. ABMB9050/6/UNIGV
wgt. 0.35kg each
L90 x W50 x D50 x T6mm

- 2 x Ø6.5mm holes
- Sold singly

Bearer Cleat Plate
Universal
Zinc Plated Steel

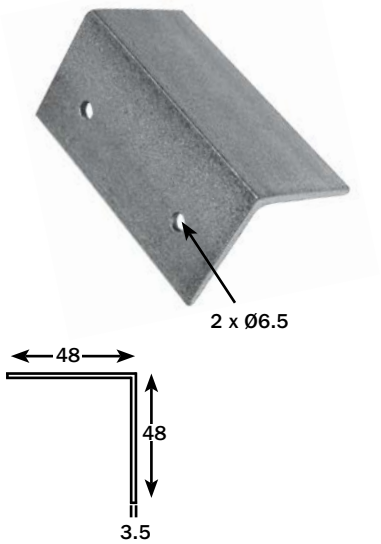

No. ABMB9548/6/UNIZP
wgt. 0.22kg each
L95 x W48 x D48 x T3.5mm

- 2 x Ø6.5mm holes
- Sold singly

Runner Bearer Bracket
Zinc Plated Steel

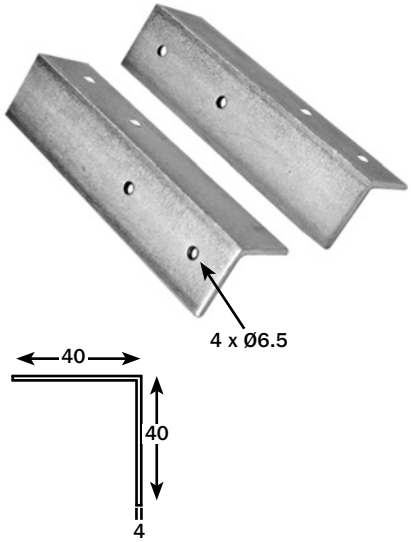

No. ABMB16540/6/PRZP
wgt. 0.80kg pair
L165 x W40 x D40 x T4mm

- 4 x Ø6.5mm holes per bracket
- Suits 100mm runner/75mm bearer
- Sold in pairs

Runner Bearer Bracket
Zinc Plated Steel

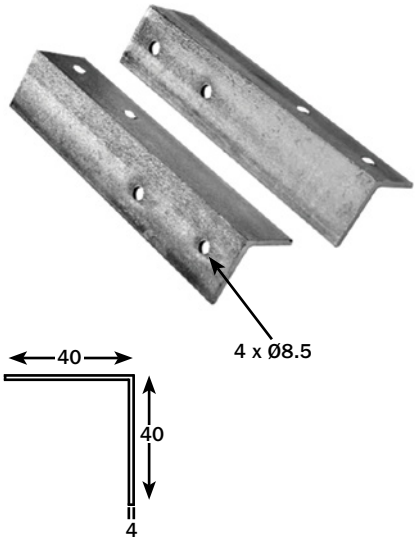

No. ABMB19040/8/PRZP
wgt. 0.94kg pair
L190 x W40 x D40 x T4mm

- 4 x Ø8.5mm holes per bracket
- Suits 100mm runner/100mm bearer
- Sold in pairs

Runner Bearer Bracket
Zinc Plated Steel

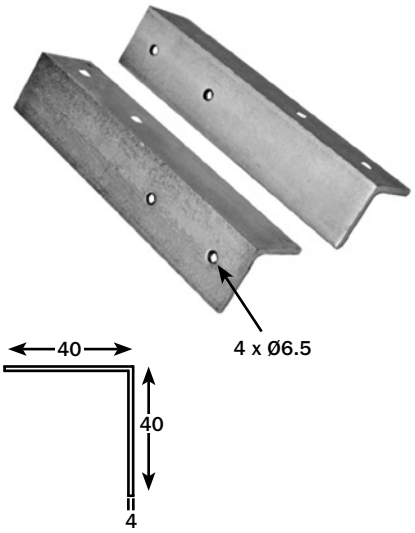

No. ABMB19040/6/PRZP
wgt. 0.94kg pair
L190 x W40 x D40 x T4mm

- 4 x Ø6.5mm holes per bracket
- Suits 100mm runner/100mm bearer
- Sold in pairs

Runner Bearer Bracket
Zinc Plated Steel

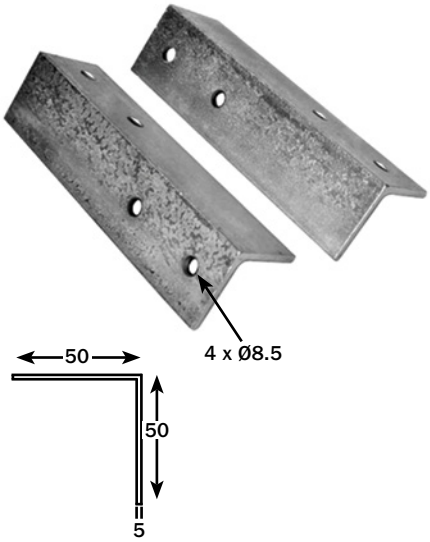

No. ABMB19050/8/PRZP
wgt. 1.42kg pair
L190 x W50 x D50 x T5mm

- 4 x Ø8.5mm holes per bracket
- Suits 100mm runner/100mm bearer
- Sold in pairs

Welwyn Garden City tel +44 (0)1707 371161 fax +44 (0)1707 372603
Coseley tel +44 (0)121 520 0100 fax +44 (0)121 522 3889
website www.cbf.uk.com e-mail: sales@cbf.uk.com

BODY MOUNTING FITTINGS

Runner Bearer Bracket
Galvanized Steel

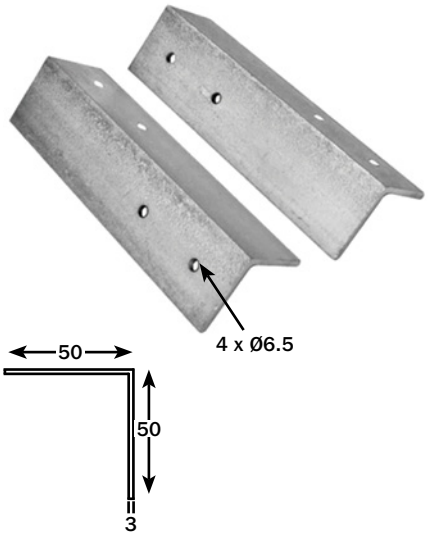

No. ABMB19050/6/PRGV
wgt. 0.70kg pair
L190 x W50 x D50 x T3mm

- 4 x Ø6.5mm holes per bracket
- Suits 100mm runner/100mm bearer
- Sold in pairs

Runner Bearer Bracket
Universal
Galvanized Steel

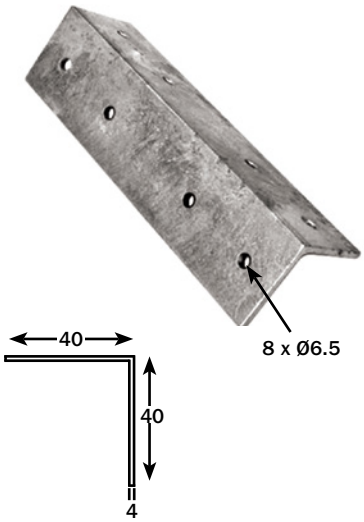

No. ABMB19040/6/UNIGV
wgt. 0.40kg each
L190 x W40 x D40 x T4mm

- 8 x Ø6.5mm holes
- Suits 100mm runner/100mm bearer
- Sold singly

Runner Bearer Bracket
Zinc Plated Steel

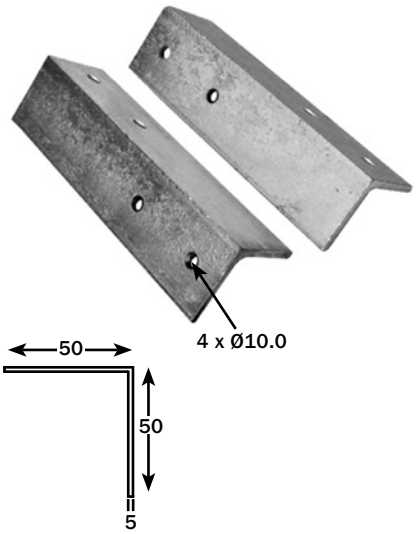

No. ABMB19050/10/PRZP
wgt. 1.40kg pair
L190 x W50 x D50 x T5mm

- 4 x Ø10mm holes per bracket
- Suits 100mm runner/100mm bearer
- Sold in pairs

Runner Bearer Bracket
Universal
Galvanized Steel

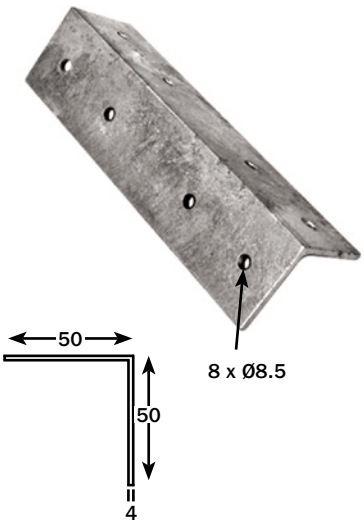

No. ABMB19050/8/UNIGV
wgt. 0.55kg each
L190 x W50 x D50 x T4mm

- 8 x Ø8.5mm holes per bracket
- Suits 100mm runner/100mm bearer
- Sold singly

Runner Bearer Bracket
Galvanized Steel

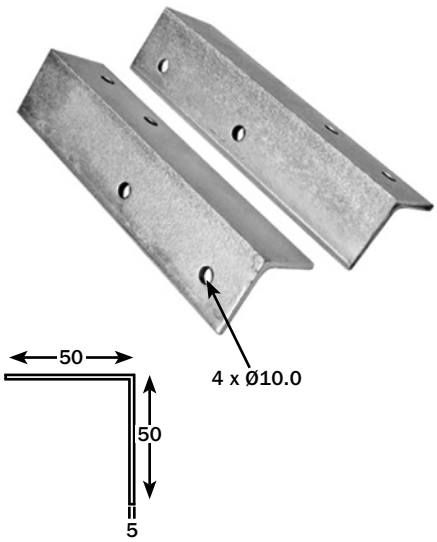

No. ABMB22050/10/PRGV
wgt. 1.51kg pair
L220 x W50 x D50 x T5mm

- 4 x Ø10mm holes per bracket
- Suits 125mm runner/100mm bearer
- Sold in pairs

Runner Bearer Bracket
Galvanized Steel

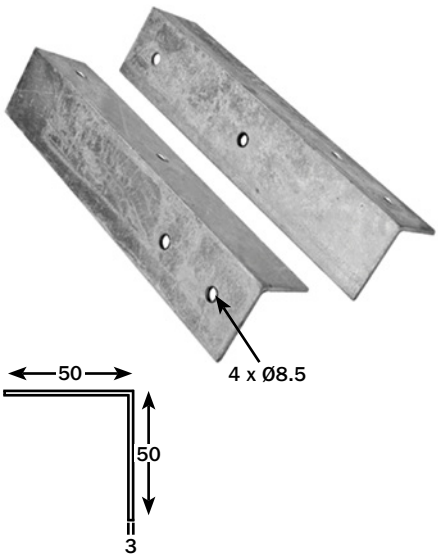

No. ABMB24050/8/PRGV
wgt. 0.89kg pair
L240 x W50 x D50 x T3mm

- 4 x Ø8.5mm holes per bracket
- Suits 150mm runner/100mm bearer
- Sold in pairs

BOLTS

Spring Loaded Bolt
Zinc Plated

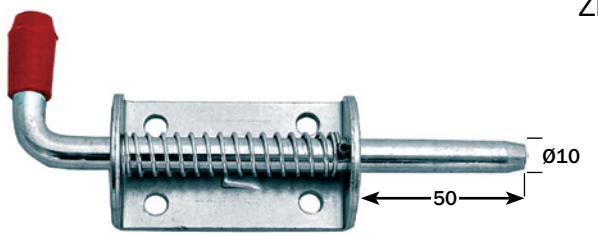

No. BOLT244/10 Zinc plated
wgt. 0.20kg

- Bolt: Ø10mm
- Bracket: L72 x W40mm
- Fixing holes: 4 x Ø5.5mm

Spring Loaded Bolt
Zinc Plated

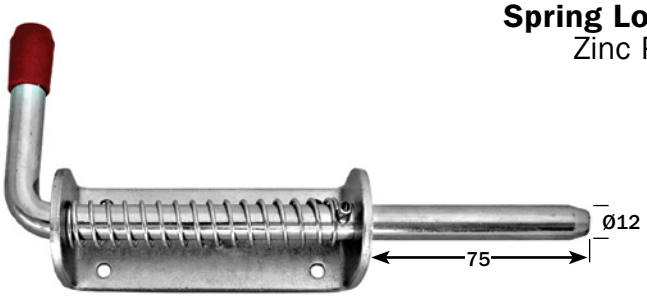

No. BOLT244/12 Zinc plated
wgt. 0.51kg

- Bolt: Ø12mm
- Bracket: L124 x W40mm
- Fixing holes: 4 x Ø6.5mm

Spring Loaded Bolt (short bracket)
Zinc Plated

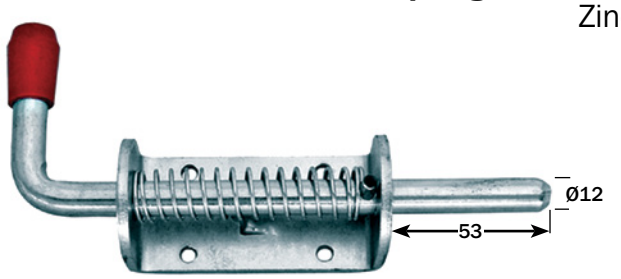

No. BOLT244/12P Zinc plated
wgt. 0.36kg

- Bolt: Ø12mm
- Bracket: L88 x W40mm
- Fixing holes: 4 x Ø5.5mm

Spring Loaded Bolt (weld-on bracket)
Zinc Plated / Self Colour

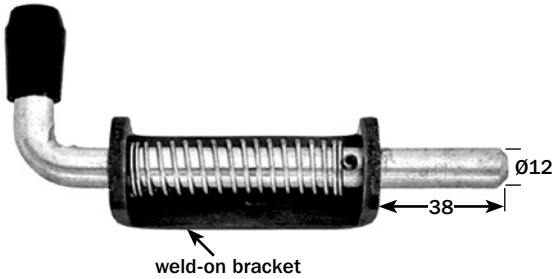

No. BOLT244/12PWB Zinc plated / self colour
wgt. 0.30kg

- Bolt: Ø12mm
- Bracket (self colour): L75 x W28mm
- Fixing holes: none

Spring Loaded Bolt (Pin type)
Zinc Plated & Stainless Steel

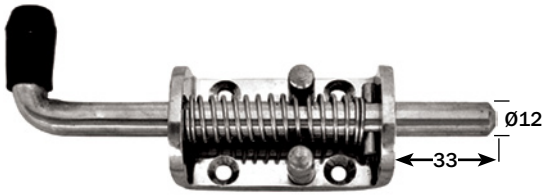

No. BOLT444/12 Zinc plated
wgt. 0.35kg

No. BOLT444/12SS Stainless steel
wgt. 0.35kg

- Bolt: Ø12mm
- Bracket: L75 x W40mm
- Fixing holes: 4 x Ø6mm countersunk

Welwyn Garden City tel +44 (0)1707 371161 fax +44 (0)1707 372603
Coseley tel +44 (0)121 520 0100 fax +44 (0)121 522 3889
website www.cbf.uk.com e-mail: sales@cbf.uk.com

BOLTS

Spring Loaded Bolt
Zinc Plated

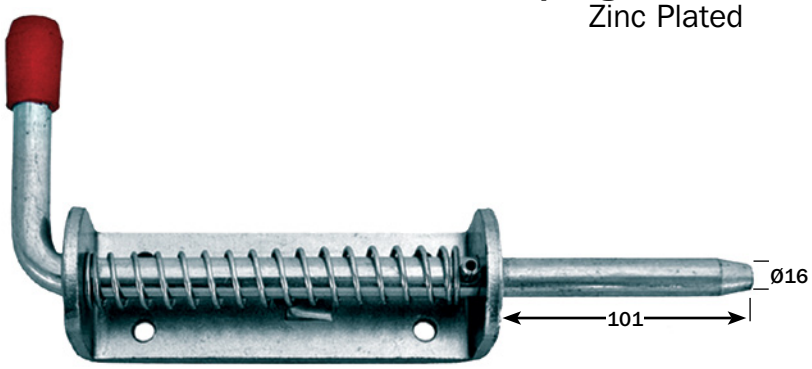

No. BOLT244/16 Zinc plated
wgt. 0.93kg

- Bolt: Ø16mm
- Bracket: L134 x W50mm
- Fixing holes: 4 x Ø6.5mm

Spring Loaded Bolt
Zinc Plated

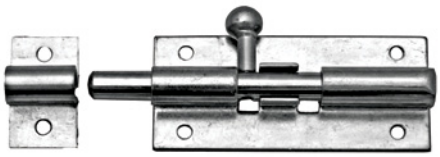

No. BOLT40/75
wgt. 0.07kg

- Size: L75 x W32mm
- Bolt: Ø8mm
- Fixing holes: 4 x Ø4mm

No. BOLT40/100
wgt. 0.10kg

- Size: L100 x W32mm

Spring Loaded Bolt
Plated Brass

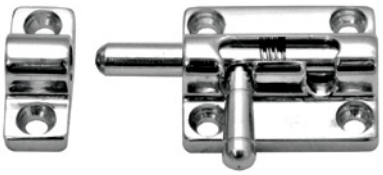

No. BOLT104
wgt. 0.05kg

- Size: L54 x W29mm
- Bolt: Ø6.3mm
- Fixing holes: 4 x Ø4mm

Spring Loaded Barrel Shoot Bolt
Weld On, Zinc Plated

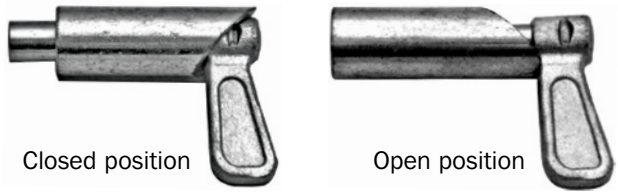

No. BOLT265/12
wgt. 0.18kg

- Bolt: Ø12mm
- Barrel: 58mm

Spring Loaded Barrel Shoot Bolt
Weld On, Zinc Plated

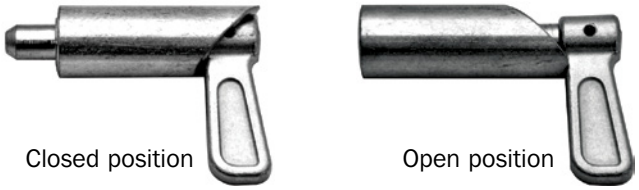

No. BOLT265/10PN
wgt. 0.17kg

- Bolt: Ø10mm
- Barrel: 58mm

Spring Loaded Bolt
Zinc Plated/Weld On

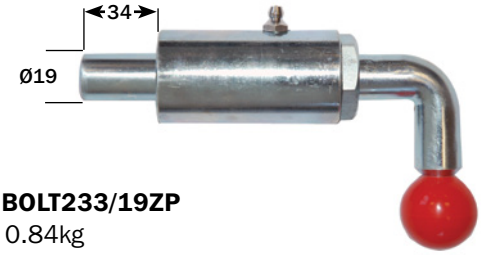

No. BOLT233/19ZP
wgt. 0.84kg

- Bolt: Ø19mm
- Complete with grease nipple
- Housing: L73 x Ø38mm

Monkey Bolt
Zinc Plated

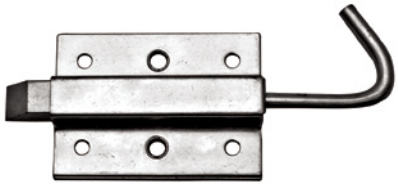

No. BOLT2482/ZP
wgt. 0.19kg

- Size: L75 x W55mm
- Fixing holes: 4 x Ø5.5mm

BOLTS

Twist Bolt
Zinc Plated/Weld On

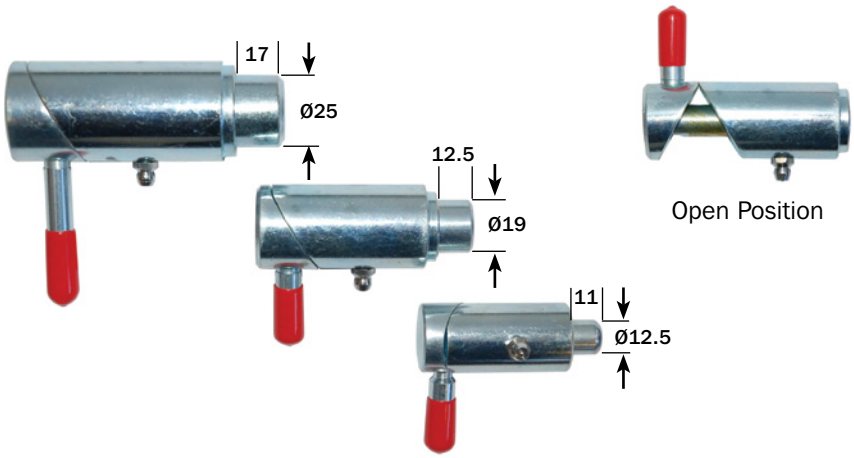

No. BOLT255/12ZP Bolt: Ø12.5mm
wgt. 0.21kg Housing: L53 x Ø25mm

No. BOLT255/19ZP Bolt: Ø19mm
wgt. 0.36kg Housing: L57 x Ø30mm

No. BOLT255/25ZP Bolt: Ø25mm
wgt. 0.59kg Housing: L71 x Ø35mm

- Complete with grease nipple

Lock Bolt
Zinc Plated/Weld On

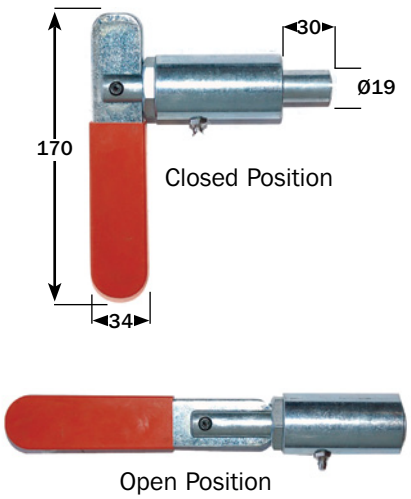

No. BOLT228/19ZP
wgt. 0.95kg

- Bolt: Ø19mm
- Housing: 73 x Ø38mm
- Complete with grease nipple
- Sprung loaded

Spring Loaded Sword Pin
Zinc Plated

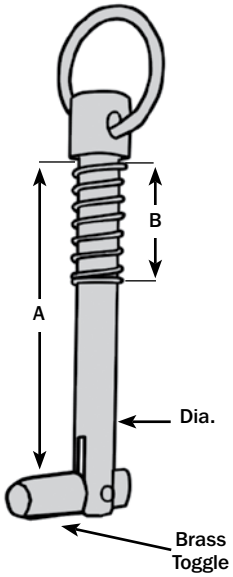

No. AMSC206/63 A = 63mm Dia. 10mm
wgt. 0.11kg B = 36mm

No. AMSC206/73 A = 73mm Dia. 10mm
wgt. 0.12kg B = 36mm

No. AMSC206/90 A = 90mm Dia. 12mm
wgt. 0.22kg B = 40mm

No. AMSC206/100 A=100mm Dia. 12mm
wgt. 0.23kg B=40mm

No. AMSC206/114 A=114mm Dia. 16mm
wgt. 0.35kg B=59mm

- All Sword Pins are supplied with: Ø40mm welded ring & 190mm x 3mm Chain & Chain Tab

Welwyn Garden City tel +44 (0)1707 371161 fax +44 (0)1707 372603
Coseley tel +44 (0)121 520 0100 fax +44 (0)121 522 3889
website www.cbf.uk.com e-mail: sales@cbf.uk.com

BUFFERS & FENDERS

Double D Fender
Manufactured from Tough Durable Black Neoprene

- Absorbs impact shock
- Countersunk mounting holes at 75mm centres

No. RUBFD101
wgt. 14.8kg

- Coil: 36.57mtr x W22 x H14mm
- Stainless steel retaining strip: 8mm wide

No. RUBFD103
wgt. 29.0kg

- Coil: 30.48mtr x W44 x H19mm
- Stainless steel retaining strip: 13mm wide

No. RUBFD105
wgt. 32.0kg

- Coil: 12.19mtr x W60 x H32mm
- Stainless steel retaining strip: 16mm wide

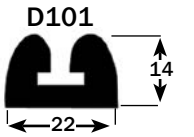

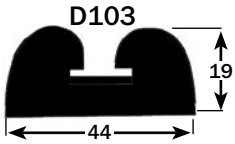

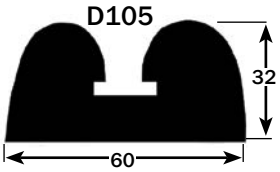

End Stop/Cap

No. RUBF103/E End Stop
wgt. 0.06kg

- To suit RUBFD103

No. RUBF105/E End Stop
wgt. 0.09kg

- To suit RUBFD105

End Stop

D Fender
'Large D'

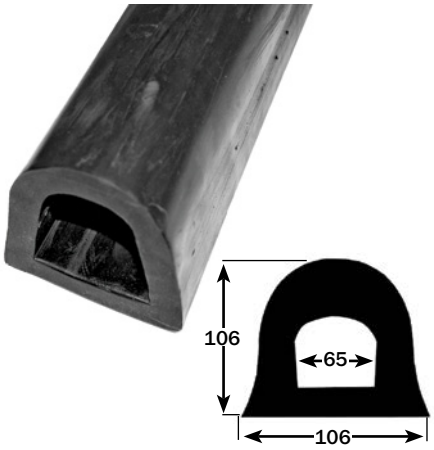

No. RUBF832/08
wgt. 16.00kg
L2550 x W106 x D106mm

- Un-drilled
- All sizes approximate

D Fender
'Large D'

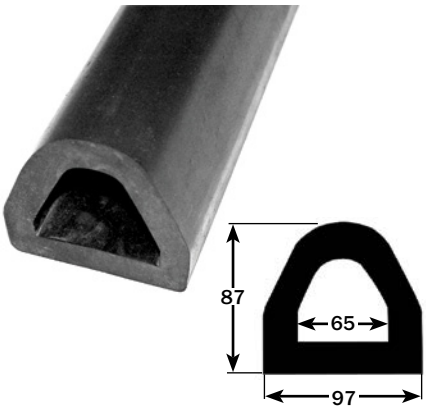

No. RUBF834
wgt. 4.61kg
L850 x W97 x D87mm

No. RUBF834/08
wgt. 14.00kg
L2550 x W97 x D87mm

- Un-drilled
- All sizes approximate

D Fender
'Medium D'

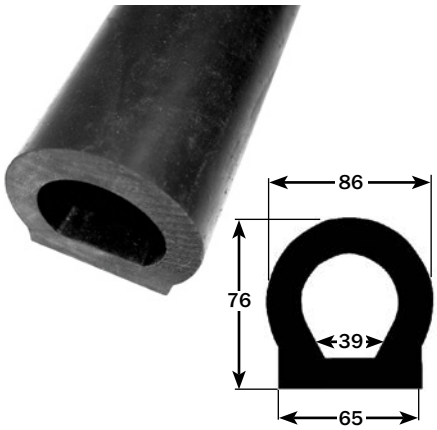

No. RUBF8033/565
wgt. 2.35kg
L565 x W86 x D76mm

No. RUBF8033
wgt. 10.61kg
L2550 x W86 x D76mm

- Un-drilled
- All sizes approximate

D Fender
'Mini D'

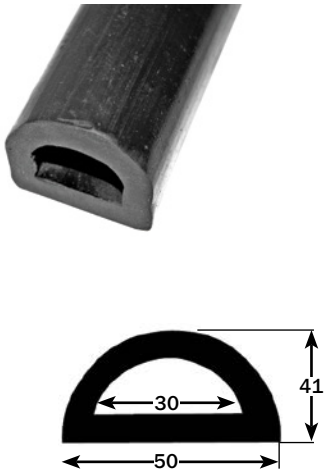

No. RUBF21/8B
wgt. 4.50kg
L2438 x W50 x D41mm

- Un-drilled
- All sizes approximate

BUFFERS & FENDERS

Buffer
Heavy Duty

No. RUBF1016 L346 x W100 x D103mm
wgt. 3.45kg Hole centres: 200mm

No. RUBF1075 L242 x W80 x D90mm
wgt. 1.62kg Hole centres: 120mm

No. RUBF1085 L195 x W80 x D80mm
wgt. 1.12kg Hole centres: 90mm

- 2 x Ø12mm Mounting holes
- Supplied with steel washers in mounting holes

Buffer
Solid

No. RUBF1622 L406 x W50 x D50mm
wgt. 1.18kg Hole centres: 160mm

No. RUBF1222 L295 x W50 x D50mm
wgt. 0.62kg Hole centres: 112mm

No. RUBF1022 L251 x W50 x D50mm
wgt. 0.54kg Hole centres: 88mm

- 3 x Ø10mm Mounting holes
- Supplied with steel washers in mounting holes

Buffer
Solid

No. RUBF822
wgt. 0.64kg
L200 x W50 x D50mm
Hole centres: 115mm

No. RUBF622
wgt. 0.41kg
L150 x W50 x D50mm
Hole centres: 75mm

- 2 x Ø10mm Mounting holes
- Supplied with steel washers in mounting holes

Buffer
Solid & Economy Type

No. RUBF511 Solid
wgt. 0.23kg
L125 x W44 x D48mm
Hole centres: 65mm

- 2 x Ø8mm Mounting holes
- Supplied with steel washers in mounting holes

No. RUBF511/EC Economy type
wgt. 0.20kg
L124 x W41 x D42mm
Hole centres: 65mm

- 2 x Ø8mm Mounting holes
- Economy type / Cavity in base

Buffer
Heavy Duty

No. RUBF1097
wgt. 0.57kg
L120 x W75 x D84mm
Hole centres: 64mm

- 2 x Ø10mm mounting holes
- Supplied with steel washers in mounting holes

Welwyn Garden City tel +44 (0)1707 371161 fax +44 (0)1707 372603
Coseley tel +44 (0)121 520 0100 fax +44 (0)121 522 3889
website www.cbf.uk.com e-mail: sales@cbf.uk.com

BUFFERS & FENDERS

D Buffer
Medium 'D'

No. RUBF833
wgt. 0.87kg
L200 x W80 x D82mm
Hole centres: 134mm

- 2 x Ø10mm mounting holes

Buffer
Heavy Duty

No. RUBF1129
wgt. 0.45kg
L150 x W100 x D94mm
Hole centres: 90mm

- 2 x Ø15mm mounting holes
- Supplied with steel washer in mounting holes

Buffer
Heavy Duty

No. RUBF200150
wgt. 3.07kg
L200 x W150 x D82mm
Hole centres: 117 / 78mm

- 4 x Ø10.5mm mounting holes
- Supplied with steel washer in mounting holes

Buffer
Domed

No. RUBF531
wgt. 0.45kg
L127 x W75 x D44mm
Hole centres: 67 / 30mm

- 4 x Ø8mm mounting holes
- Supplied with steel washers in mounting holes

Top Hat Buffer
Solid & Economy Type

No. RUBF411 Solid
wgt. 0.10kg
L110 x W25 x D40mm

- 2 x Ø5mm mounting holes
- Hole centres: 85mm

No. RUBF411/EC Economy Type
wgt. 0.07kg
L103 x W25 x D37mm

- 2 x Ø8mm mounting holes
- Hole centres: 80mm
- Cavity in base

Churchdoor
Buffer & Bracket

No. RUBFCBF400/BU Buffer
wgt. 0.13kg

- Base: L94 x W48mm

No. RUBFCBF400/BKT Bracket
wgt. 0.18kg

- Self colour steel
- Base: L100 x W50mm

BUFFERS & FENDERS

Oval Buffer
Solid & Hollow

No. RUBF458 Solid
wgt. 0.07kg
Base: 68 x 34 x 36mm
Hole centres: 48mm

No. RUBF1008 Cavity in base
wgt. 0.02kg
Base: 68 x 34 x 20mm
Hole centres: 46mm

No. RUBF1008/S Solid
wgt. 0.03kg
Base: 68 x 34 x 20mm
Hole centres: 46mm

- 2 x Ø6.5mm mounting holes

Refrigeration Door Buffer
Conical

No. RUBF1875
wgt. 0.23kg
Base: Ø64mm
Top: Ø51mm
Height: 75mm

- 1 x Ø9.5mm mounting hole

Conical Buffer

No. RUBF1118
wgt. 0.03kg
Base: Ø30mm
Top: Ø20mm
Height: 40mm

- 1 x Ø6mm mounting hole

Round Buffer

No. RUBF1246
wgt. 0.002kg
Diameter: 22mm
Height: 8mm

- 1 x Ø4mm mounting hole

Buffer
Conical

No. RUBF236
wgt. 0.29kg
Base: Ø87mm
Top: Ø50mm
Height: 50mm

- 1 x Ø9.5mm mounting hole
- Supplied with steel washer in mounting hole

Buffer

No. RUBF112/36
wgt. 0.03kg
Diameter: 36mm
Height: 27mm

- 1 x Ø6.5mm mounting hole

Buffer

No. RUBF118
wgt. 0.02kg
Diameter: 28mm
Height: 25mm

- 1 x Ø6.5mm mounting hole

Commercial Rubber

For quotation purposes please confirm width, thickness & length required

Commercial quality rubber with a woven cotton or terylene reinforcement

- Available in various lengths and thicknesses

Welwyn Garden City tel +44 (0)1707 371161 fax +44 (0)1707 372603
Coseley tel +44 (0)121 520 0100 fax +44 (0)121 522 3889
website www.cbf.uk.com e-mail: sales@cbf.uk.com

BUFFERS & FENDERS

Roller Buffers
Horizontal Fitment
Galvanized Housing

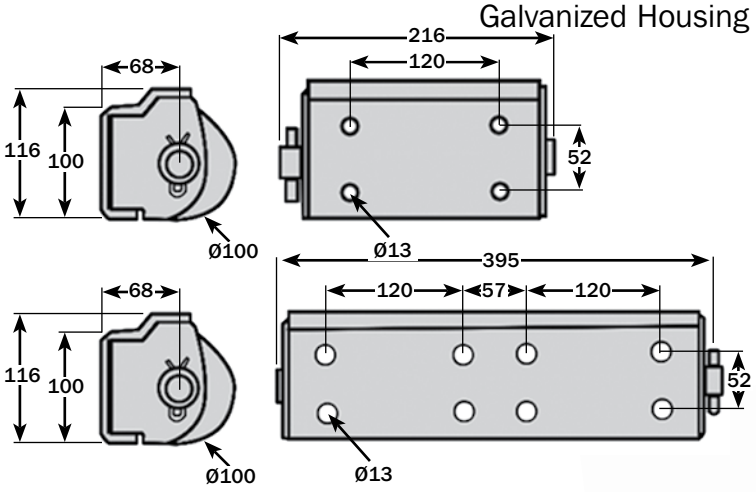

No. RUBF650/2HGV 2 roller
wgt. 6.00kg

- 25mm Axle
- Raised grip tread

No. RUBF650/4HGV 4 roller
wgt. 10.90kg

- 25mm Axle
- Raised grip tread

Roller Buffers
Vertical Fitment
Galvanized Housing

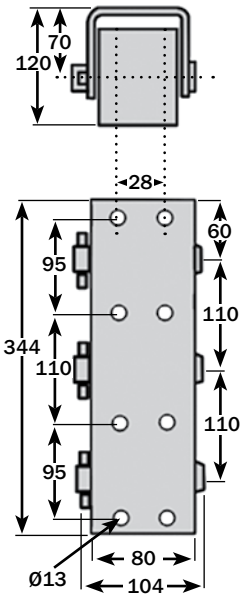

No. RUBF3950259GA 3 roller
wgt. 7.70kg

- 25mm Axles
- Narrow housing – W80mm
- Spares available upon request

Roller Buffers
Vertical Fitment
Galvanized Housing

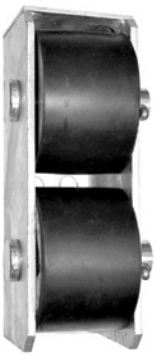

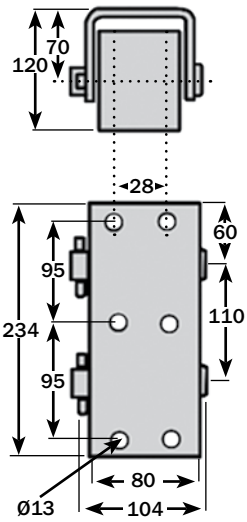

No. RUBF3950258GA 2 roller
wgt. 5.28kg

- 25mm Axles
- Narrow housing – W80mm
- Spares available upon request

Replacement
Roller Buffer

No. RUBF650/1RR
wgt. 0.95kg
W80 x Ø100mm

- Suits 25mm axle
- Suits RUBF650 range

Replacement
Axle

No. RUBF650/2AZP
wgt. 0.86kg
L208 x Ø25mm

- Complete with washer & split pin
- Zinc plated
- Suits **RUBF650/2HGV**

Welwyn Garden City tel +44 (0)1707 371161 fax +44 (0)1707 372603
Coseley tel +44 (0)121 520 0100 fax +44 (0)121 522 3889
website www.cbf.uk.com e-mail: sales@cbf.uk.com

BUFFERS & FENDERS

Sponge Rubber Strip
Self Adhesive

- Black
- Closed cell, expanded EPDM
- Shore hardness 48 ±5
- Other sizes available
- Temperature range -40°C to +90°C

Part No.	Length (metre)	Width (mm)	Thickness (mm)	wgt. (kg)
RUMS1206/SA	10	12	6	0.14
RUMS1903/SA	10	19	3	0.11
RUMS1906/SA	10	19	6	0.15
RUMS1908/SA	10	19	8	0.24
RUMS1910/SA	10	19	10	0.29
RUMS2012/SA	10	20	12	0.30
RUMS2503/SA	10	25	3	0.14
RUMS2506/SA	10	25	6	0.20

Sponge Cord

No. RUMS25037/25
wgt. 3.25kg
L25mtr x ø25mm
No. RUMS25037/7
wgt. 0.91kg
L7mtr x ø25mm

- Closed cell, expanded EPDM
- 0.37 density

Rubber Matting
Fine Ribbed

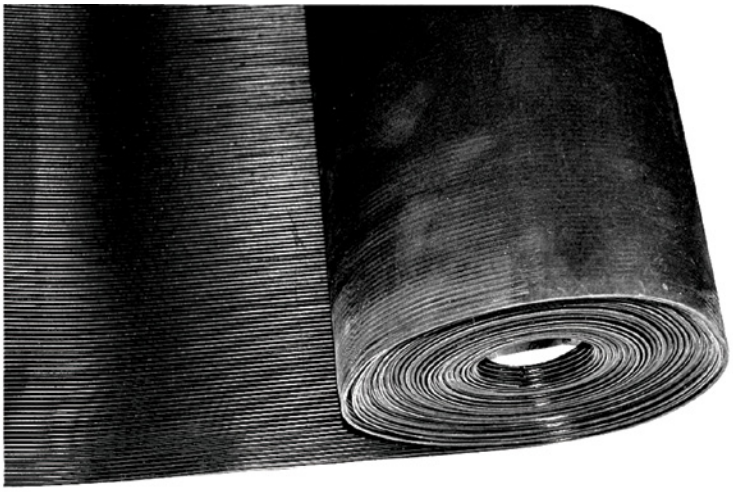

- Black SBR / NR blend
- 65 Shore hardness
- Anti-slip top / cloth impression reverse

Part No.	Length (metre)	Width (mm)	Thickness (mm)	wgt. (kg)
RUMS36/FF	10	915	3	26.00
RUMS36/HALF FF	5	915	3	13.00
RUMS48/FF	10	1200	3	38.00
RUMS48/HALF FF	5	1200	3	19.00

Matting
Heavy Duty

No. RUMS21/15
wgt. 35.50kg
L1800 x W1200 x D15mm

No. RUMS21/12
wgt. 26.00kg
L1800 x W1200 x D12mm

No. RUMS21/10
wgt. 21.66kg
L1800 x W1200 x D10mm

- Coconut matting also available

Welwyn Garden City tel +44 (0)1707 371161 fax +44 (0)1707 372603
Coseley tel +44 (0)121 520 0100 fax +44 (0)121 522 3889
website www.cbf.uk.com e-mail: sales@cbf.uk.com

BUFFERS & FENDERS

Side Trim
(Rub Rail)

Trim Section

Aluminium Carrier

No. RUBFCBF6015/25R Trim Section
wgt. 0.68kg
W60mm x D15mm

- Available in 25 metre rolls only

No. RUBFCBF6015/AC Aluminium Carrier
wgt. 1.15kg
Length: 3.0mtr

No. RUBFCBF6015/E End Stop
wgt. 0.008kg

End Stop

PVC Internal Rub Rail
Medium Duty

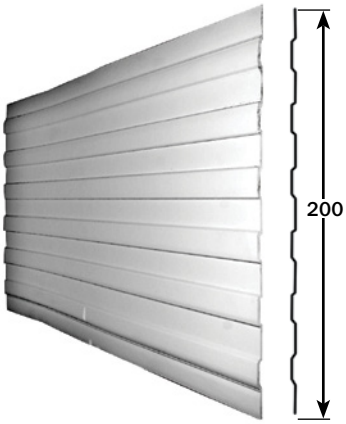

No. RUMSCBF200/38 White
wgt. 3.00kg
L3800 x H200 x T2.0mm

- Suitable for dry freight and refrigeration use

PVC Internal Rub Rail
Heavy Duty

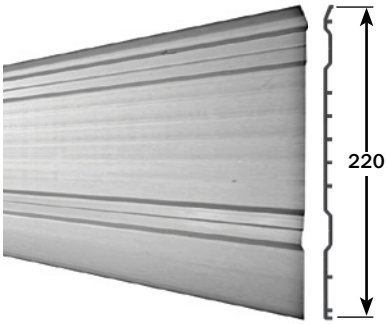

No. RUMS220/50G Grey
wgt. 4.48kg
L5000 x H220 x T2.8mm

- Suitable for dry freight and refrigeration use

Rub Rail
Heavy Duty

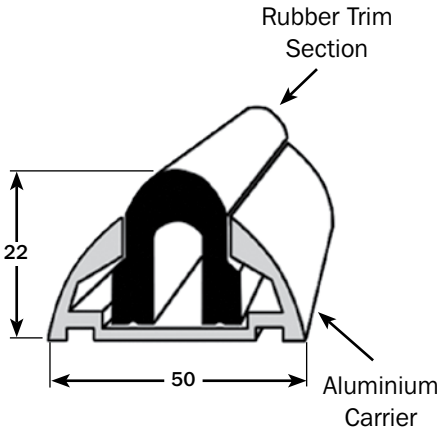

No. RUBF604/15/BTI Rubber trim section
wgt. 5.12kg/roll 15 metre roll
Black trim insert

No. RUBF604/365/AC Aluminium Carrier
wgt. 2.88kg/length 3.65 metre length
Anodised/polished

No. RUBF604/SSEC Stainless steel end cap
wgt. 0.082kg

End Cap

BULKHEADS – INSULATED

Insulated Bulkheads
EPS Closed Cell Core

The partnership between CBF and Randall Manufacturing brings the Cool-Guard temperature zoning, insulated bulkhead range to the UK.
Many different styles and designs are available and manufactured to your specific requirements.
The Cool-Guard core is constructed using 66mm EPS (expanded polystyrene), a closed-cell moisture resistant material designed to resist water ingress and bacteria forming.
This is sandwiched between 5mm Polyethylene foam shock-resistant layers and a heavy-duty reinforced vinyl skin.
An overall thickness of 78mm is achieved offering optimal temperature control and durability.

Key Benefits

- 78mm Overall thickness, 66mm EPS lightweight core
- 620gm Reinforced vinyl skin
- Extremely lightweight and robust design
- Unique GRP internal stiffeners offer additional support for impact damage. These also prevent the bulkhead from sagging when in the stowed position
- Durable polyester webbing hinges
- Flush mounted bolts used in all applications
- Heat sealed vinyl perimeter
- 'CG-Foam' Low density perimeter foam for superior compression
- Can be supplied in a multitude of configurations
- High impact skid-guard, can be supplied in 150mm & 250mm depths
- K-Value tested to comply with ATP Classification – *documentation available upon request*
- Generally available within a 7-10 day production time

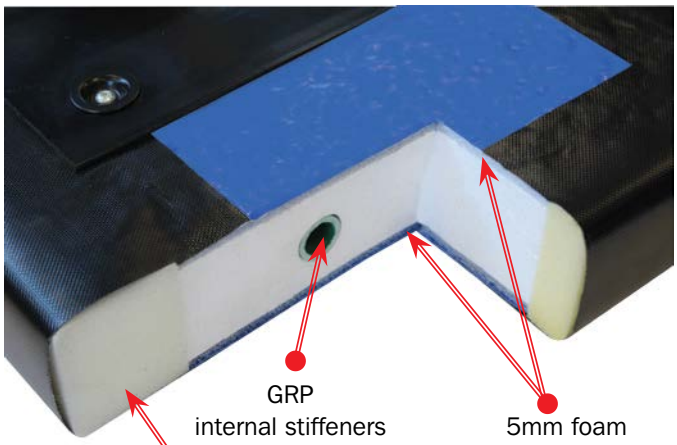

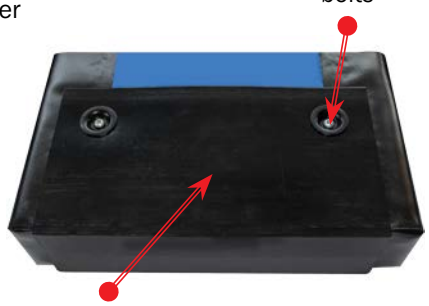

Skidguards

All Cool-Guard Bulkheads are fitted, as standard, with a heavy-duty PE skid-guard. This prevents damage to the bottom of the unit when being operated and scuffed along the vehicle floor. It also prevents lower damage from trolleys, cages, pallets etc., this offers a great barrier against costly repairs and down-time.
The skidguard can be supplied in heights of 150mm and 250mm.

ONE-PIECE TRACK MOUNTED
TO SUIT RIGID/TRAILER BODIES

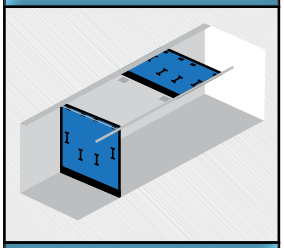

TWO-PIECE TRACK MOUNTED
TO SUIT RIGID/TRAILER BODIES

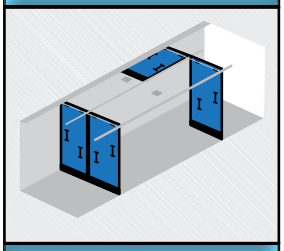

BI-FOLD
TO SUIT RIGID/TRAILER BODIES

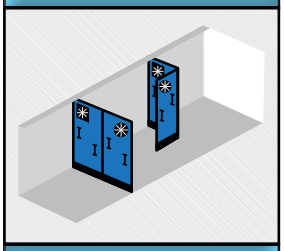

BI-FOLD STYLE
TO SUIT VANS

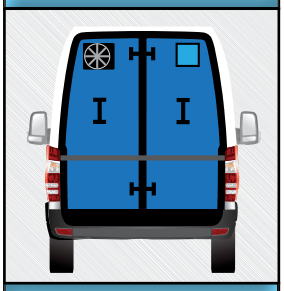

PLUG STYLE
TO SUIT VANS

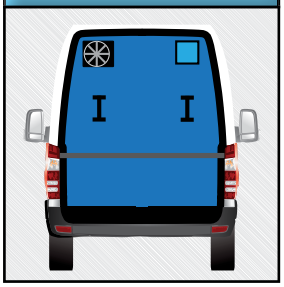

Welwyn Garden City tel +44 (0)1707 371161 fax +44 (0)1707 372603
Coseley tel +44 (0)121 520 0100 fax +44 (0)121 522 3889
website www.cbf.uk.com e-mail: sales@cbf.uk.com

BULKHEADS – INSULATED

Insulated Bulkheads
EPS Closed Cell Core

Easy-Lift Lifting & Storing Device

The 'Easy-Lift' mechanism is fitted as standard on all Roof Mounted Systems, which allows the bulkhead to be effortlessly lifted and stored. The integrated 'CG-Cleat' grips the rope when being lifted, to avoid the bulkhead slipping and then self-locks when in the desired position, holding the unit firmly against the roof. All 'CG-Cleats' have been fully tested to a breaking strength of 230kgs, so you can be confident in the fact that once the bulkhead is stored, it will remain stored!

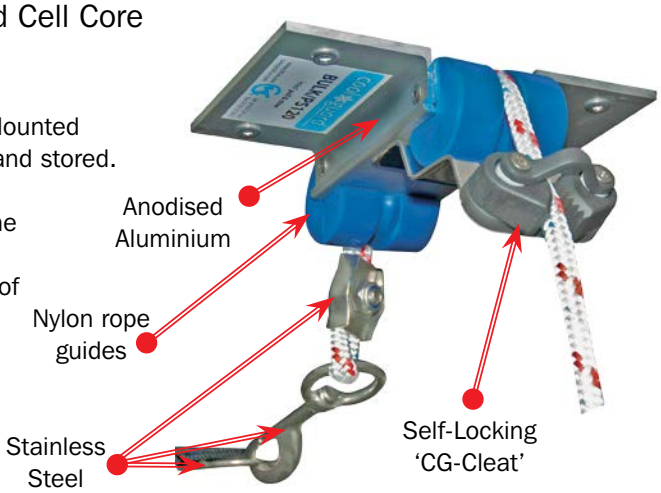

Easy-Glide Track & Roller System

The Easy-Glide rollers incorporate 4 Nylon wheels, which are used in conjunction with side-wall 'J' tracks and the unique centre tracks that are present in the two-piece units. These allow the bulkhead to be smoothly moved along the vehicle into the desired position.

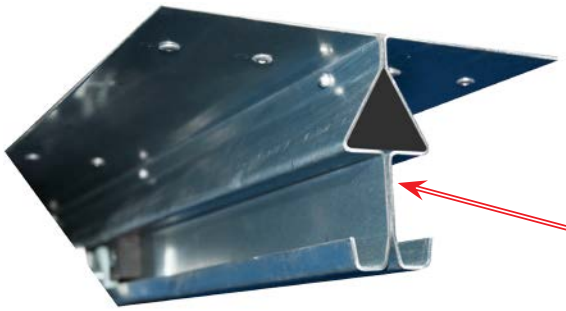

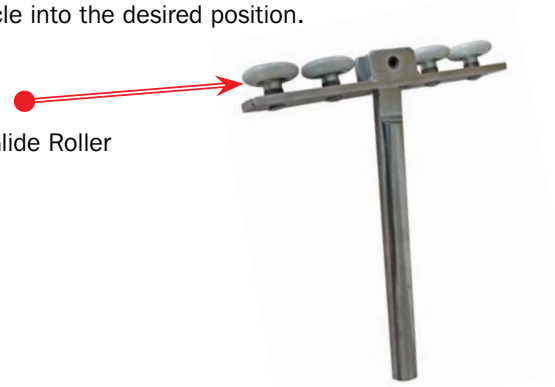

Roof Mounted Bulkheads

- Ideally suited for trailers and rigid vehicles
- Once bulkheads are stowed the vehicle can be loaded/unloaded without the need to remove them
- Easy-Glide rollers allow the bulkhead to be effortlessly moved along the length of the vehicle
- 'Easy-Lift' Pulley system complete with integrated 'CG-Cleat'
- Thermostatic fan kits (optional)
- Various configurations available, including one-piece, two-piece, three-piece
- Side wings (optional)
- See page 32 for a full list of options

Two-piece System

Fully Portable Units

- Ideally suited for vans and small rigid vehicles
- Various configurations available including one-piece (plug) and Bi-fold
- Wheel box flaps (optional)
- Thermostatic fan kits (optional)
- Can be manufactured to suit any shape or style of van
- See page 32 for a full list of options

Panel van bulkhead

BULKHEADS – INSULATED

Insulated Bulkheads
EPS Closed Cell Core

Options

- Wheel-Box flaps, commonly used on vans
- Corner cut-outs, can be shaped to accommodate ducting/conduit etc.
- Side wings, commonly used on rigid and trailer vehicles. Velcro tabs are sewn onto the polyester hinge allowing the wings to be held against the bulkhead when being stowed
- Ventilation flaps, three different styles are available:
  - VF-Flap, smaller bleed flap. Commonly used on vans
  - TF-Flap MK1 & MK2, commonly used on trailers and rigid vehicles
- Thermostatic fan kits are used where dual temperature control is required
  - VF-Tech, suitable for smaller vehicles
  - TF-Tech, suitable for larger vehicles
- Many more options are available, please contact us for more information

WHEEL-BOX FLAPS

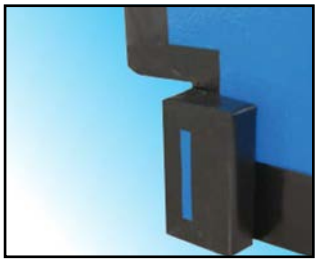

CORNER CUT-OUTS

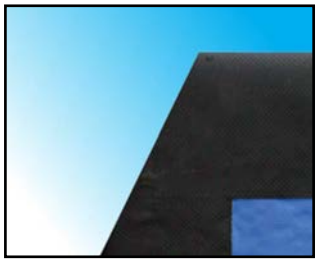

SIDE WINGS

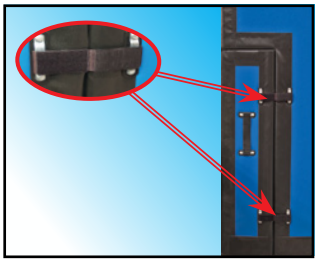

VF-TECH FAN KIT-12v

VF-FLAP

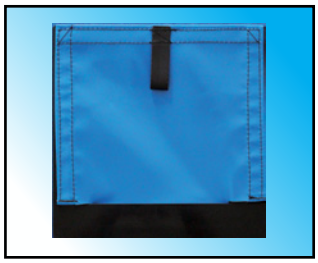

TF-FLAP MK1

TF-FLAP MK2

TF-TECH FAN KIT-12v & 24v

One-Piece with centre door

Panel van bulkhead

Two-piece System

Bi-fold bulkhead

To keep up-to-date with all the latest products visit our website

www.cbf.uk.com

Welwyn Garden City tel +44 (0)1707 371161 fax +44 (0)1707 372603
Coseley tel +44 (0)121 520 0100 fax +44 (0)121 522 3889
website www.cbf.uk.com e-mail: sales@cbf.uk.com

CHAIN & CHAIN FITTINGS

Straight Link Chain
Medium Duty

No. ACHN10/3ZP Zinc plated
wgt. 1.62kg 10m x Ø3mm
Links per metre: 48

No. ACHN10/5SC Self colour
wgt. 5.75kg 10m x Ø5mm
Links per metre: 36

No. ACHN10/5GV Galvanized
wgt. 6.09kg 10m x Ø5mm
Links per metre: 36

No. ACHN10/6SC Self colour
wgt. 7.20kg 10 x Ø6mm
Links per metre: 24

No. ACHN10/6GV Galvanized
wgt. 9.50kg 10 x Ø6mm
Links per metre: 24

Straight Link Chain
Heavy Duty

No. ACHN30/08SC Self colour
wgt. 34.00kg 30m x Ø8mm
Links per metre: 19

No. ACHN30/08GV Galvanized
wgt. 34.00kg 30m x Ø8mm
Links per metre: 19

Tailboard Chain & Loop Plate

No. ACHN102/08 920mm long
wgt. 1.13kg

- 8mm Galvanized chain
- Galvanised loop plate

Spring Hook
Zinc Plated

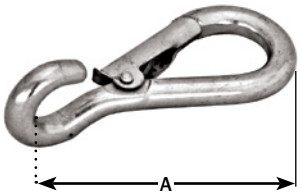

No. ACHN50 A = 50mm
wgt. 0.03kg

No. ACHN63 A = 63mm
wgt. 0.04kg

No. ACHN75 A = 75mm
wgt. 0.06kg

No. ACHN100 A = 100mm
wgt. 0.13kg

Spring Hook & Chain
Zinc Plated

No. ACHN75/CH Hook: 75mm
wgt. 0.09kg Chain: 150mm

No. ACHN75/12CH Hook: 75mm
wgt. 0.11kg Chain: 300mm

No. ACHN100/CH Hook: 100mm
wgt. 0.18kg Chain: 300mm

- Complete with chain tab

Chain Tab
Zinc Plated

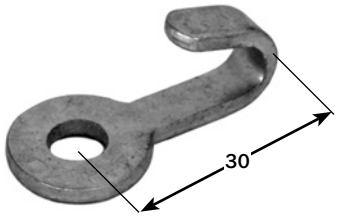

No. ACHN247/ZP
wgt. 0.02kg

- 3mm Pressed mild steel
- Hole for Ø8mm bolt

COTTERS & CHAINS

Flat Cotter & Chain
Self Colour & Zinc Plated

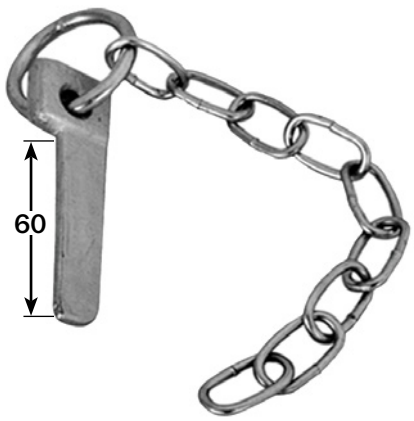

No. ACOT10A/SC Self colour
wgt. 0.10kg

No. ACOT10A/ZP Zinc plated
wgt. 0.10kg

- Pin: 60 x 15 x 4.5mm
- Supplied complete with welded ring and 190 x 3mm chain

'D' Shaped Cotter & Snap Ring
Gold Passivated

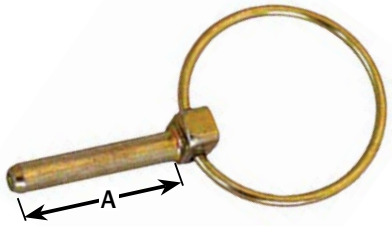

No. ACOT9/045 Pin: Ø4.5mm
wgt. 0.02kg Ring: Ø36mm
A = 32mm

No. ACOT9/06 Pin: Ø6mm
wgt. 0.03kg Ring: Ø50mm
A = 44mm

No. ACOT9/08 Pin: Ø8mm
wgt. 0.03kg Ring: Ø50mm
A = 44mm

No. ACOT9/08LR Pin: Ø8mm
wgt. 0.03kg Ring: Ø54mm
A = 44mm

No. ACOT9/11 Pin: Ø11mm
wgt. 0.04kg Ring: Ø50mm
A = 44mm

- Supplied complete with snap ring

Cotter, Chain & Snap Ring
Self Colour & Zinc Plated

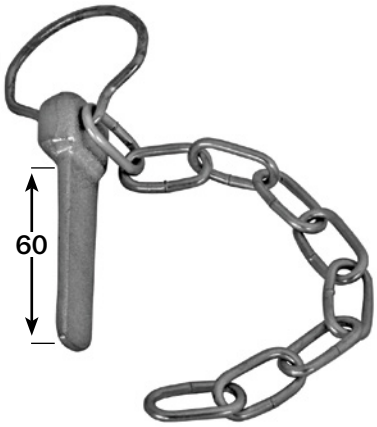

No. ACOT13/SC Self colour
wgt. 0.10kg

No. ACOT13/ZP Zinc plated
wgt. 0.10kg

- Pin: 60 x 15 x 4.5mm
- Supplied complete with snap ring and 190 x 3mm chain

'D' Shaped Cotter, Chain & Snap Ring
Gold Passivated

No. ACOT9/06CH Pin: Ø6mm
wgt. 0.05kg Ring: Ø50mm

No. ACOT9/08CH Pin: Ø8mm
wgt. 0.06kg Ring: Ø50mm

No. ACOT9/11CH Pin: Ø11mm
wgt. 0.08kg Ring: Ø50mm

- Pin length: 44mm
- Supplied complete with snap ring and 190 x 3mm chain

Round Cotter & Chain
Zinc Plated

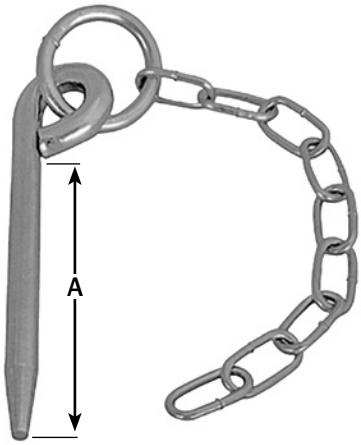

No. ACOT215/06 A = 90 x Ø6mm
wgt. 0.09kg

No. ACOT215/08 A = 73 x Ø8mm
wgt. 0.11kg

No. ACOT215/10 A = 98 x Ø10mm
wgt. 0.14kg

- Supplied complete with snap ring and 190 x 3mm chain

Round Cotter & Wire
Zinc Plated

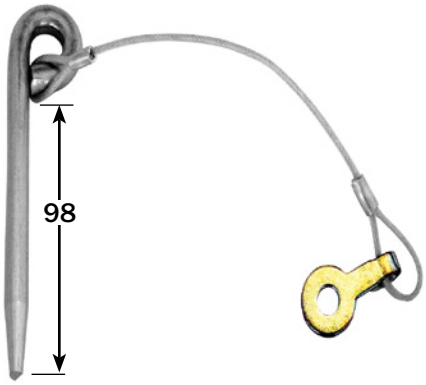

No. ACOT215/10WR
wgt. 0.09kg
Pin: 98mm x Ø10mm

- Supplied complete with 190mm plastic coated wire & tab

Welwyn Garden City tel +44 (0)1707 371161 fax +44 (0)1707 372603
Coseley tel +44 (0)121 520 0100 fax +44 (0)121 522 3889
website www.cbf.uk.com e-mail: sales@cbf.uk.com

COTTERS & CHAINS

Round Spring Cotter
Zinc Plated

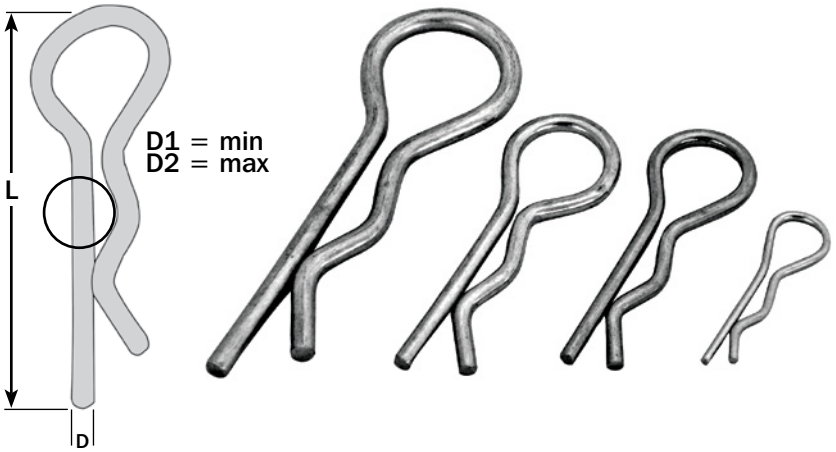

Part No.	L (mm)	D (mm)	D1 (mm)	D2 (mm)	wgt. (kg)
ACOT15/14	43	2.00	8	14	0.002
ACOT15/10	67	3.50	11	18	0.010
ACOT15/08	74	4.00	12	20	0.016
ACOT15/06	105	5.00	20	30	0.034

Cotter & Snap Ring
Zinc/Gold Passivate

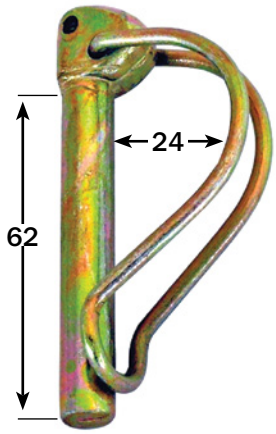

No. ACOT351
wgt. 0.06kg
Pin: L62 x Ø9.5mm

● Supplied complete with snap ring

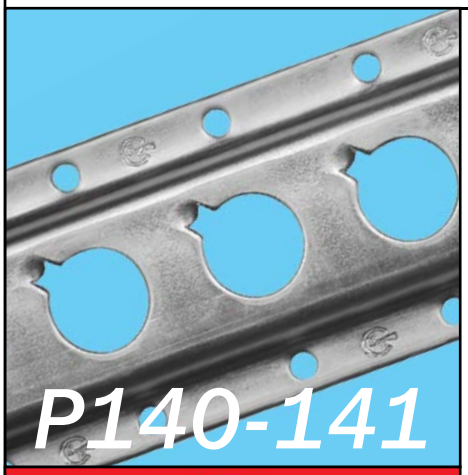
P140-141

P194-203

Round Spring Cotter 'Double Coil'
Zinc Plated

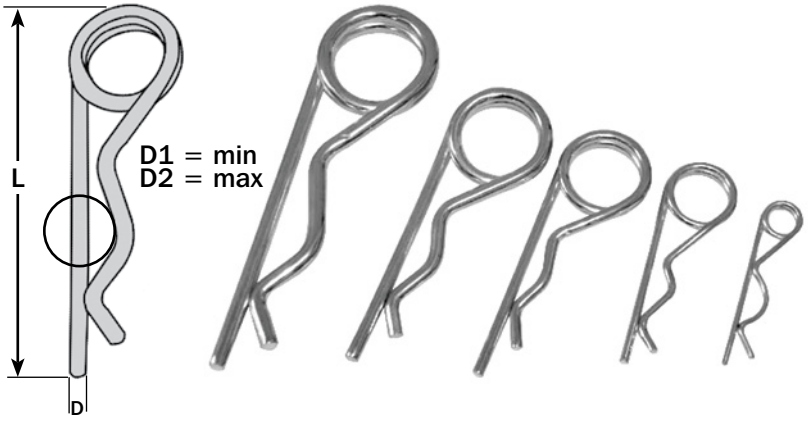

Part No.	L (mm)	D (mm)	D1 (mm)	D2 (mm)	wgt. (kg)
ACOT18/02	61	2.00	8	14	0.003
ACOT18/03	74	3.00	14	19	0.012
ACOT18/04	95	4.00	16	24	0.026
ACOT18/05	107	5.00	19	30	0.046
ACOT18/06	140	6.00	23	35	0.092

CURTAIN TENSIONERS

Curtain Tensioner Range

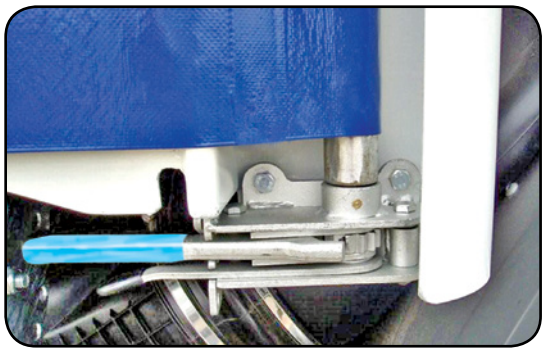

CARGCBF515/40LH Mounted Tensioner

*Offside Front shown

The drawing above shows the positioning of all handed tensioners

All curtain tensioners require routine maintenance

- 304G Stainless steel handles are used where shown to eliminate handle seizure
- Custom curtain tensioners can be produced, subject to minimum order quantities

Medium Duty Curtain Tensioner
Zinc Plated

Left Hand

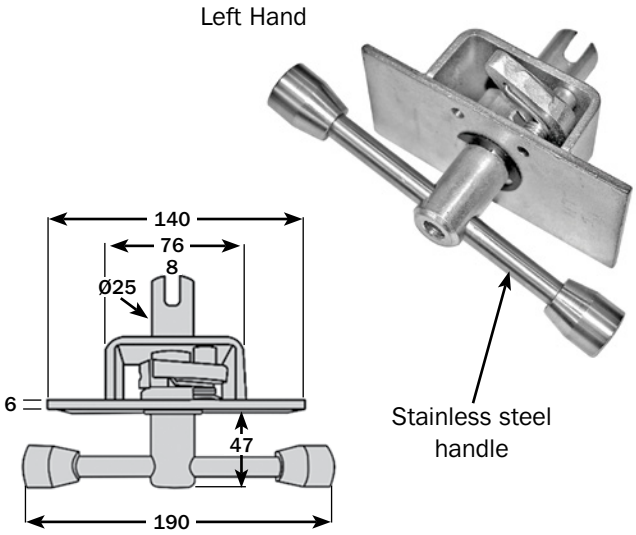

No. CARG25PR/LH Left hand

No. CARG25PR/RH Right hand

wgt. 1.80kg each

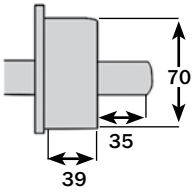

- Plate: 140 x 70mm
- Round slotted shaft: Ø25mm
- 304G Stainless steel handle

Medium Duty Curtain Tensioner
Zinc Plated / Gold Passivation

Left Hand

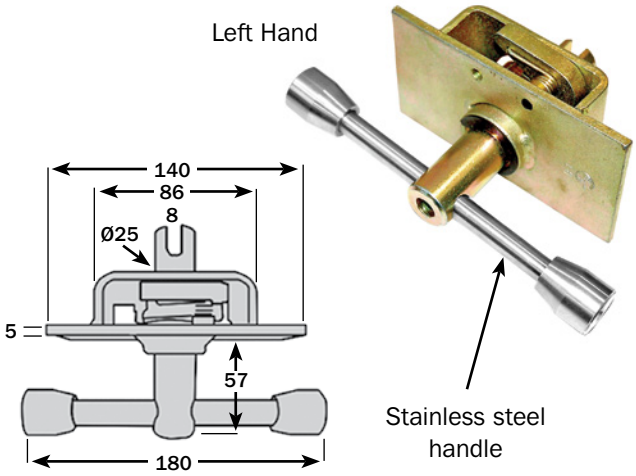

No. CARGCBF501/LH Left hand

No. CARGCBF501/RH Right hand

wgt. 1.68kg each

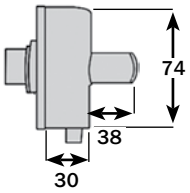

- Plate: 140 x 74mm
- Round slotted shaft: Ø25mm
- 304G Stainless steel handle
- Nylon bushed
- Spare parts available

Medium Duty Curtain Tensioner
Zinc Plated / Gold Passivation

Left Hand

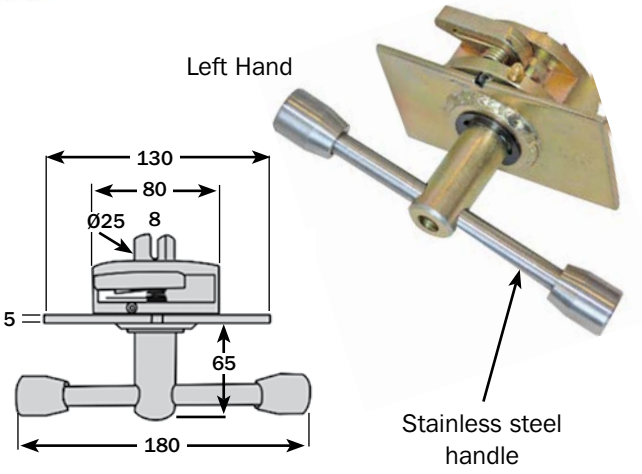

No. CARGCBF502/LH Left hand

No. CARGCBF502/RH Right hand

wgt. 2.00kg each

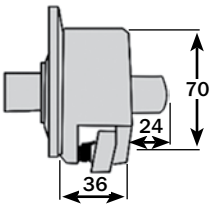

- Plate: 130 x 70mm
- Round slotted shaft: Ø25mm
- 304G Stainless steel handle
- Grease nipple
- Nylon bushed
- Spare parts available

Welwyn Garden City tel +44 (0)1707 371161 fax +44 (0)1707 372603
Coseley tel +44 (0)121 520 0100 fax +44 (0)121 522 3889
website www.cbf.uk.com e-mail: sales@cbf.uk.com

CURTAIN TENSIONERS

Medium Duty Curtain Tensioner
Zinc Plated / Gold Passivation

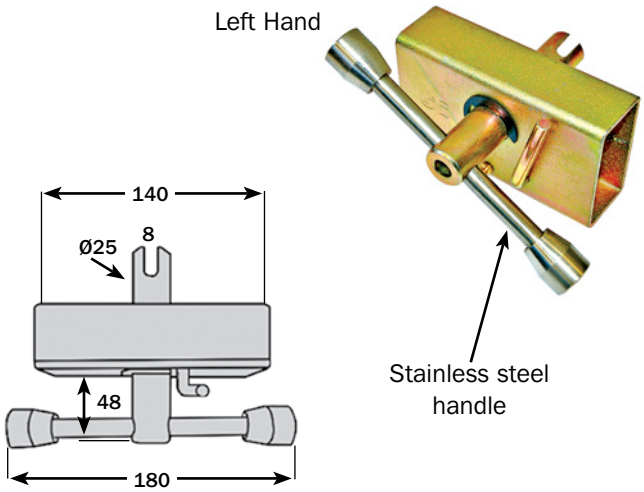

No. CARGCBF503/LH Left hand
No. CARGCBF503/RH Right hand
wgt. 1.63kg each

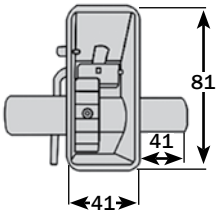

- Body: 140 x 81 x 41mm Deep
- Round slotted shaft: Ø25mm
- 304G Stainless steel handle
- Grease nipple

Heavy Duty Curtain Tensioner
Grey Painted Finish

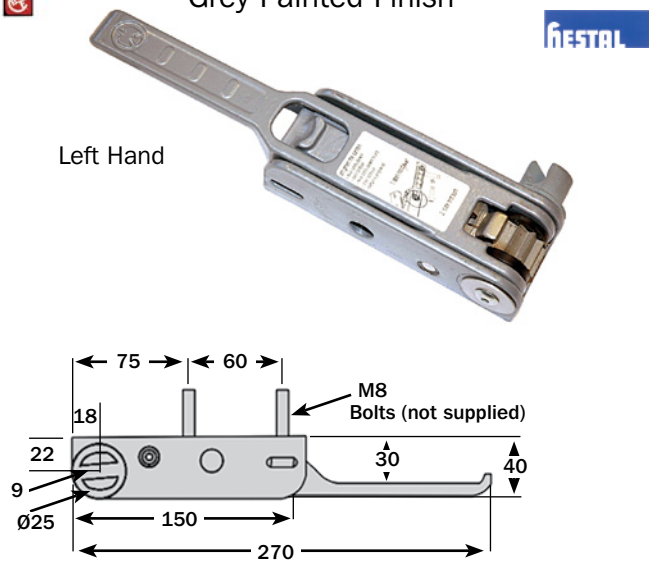

No. CARG614110100/LH Left hand
No. CARG614110000/RH Right hand
wgt. 1.40kg each

- Round slotted shaft: Ø25mm
- Grey painted finish
- 2 Fixing points

Heavy Duty Curtain Tensioner
Zinc Plated / Gold Passivation

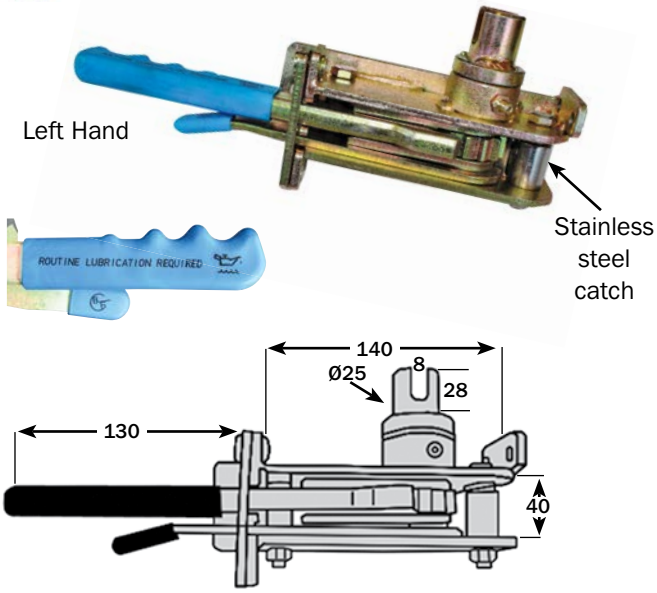

No. CARGCBF505/SLLH Left hand
No. CARGCBF505/SLRH Right hand
wgt. 2.22kg each

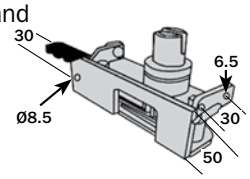

- Round slotted shaft: Ø25mm
- Grease nipple
- 3 Fixing points

Heavy Duty Curtain Tensioner
Zinc Plated / Gold Passivation

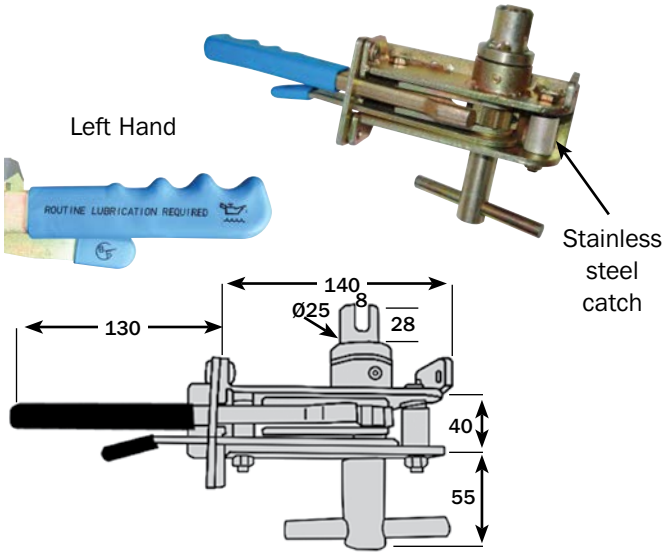

No. CARGCBF505/LH Left hand
No. CARGCBF505/RH Right hand
wgt. 2.46kg each

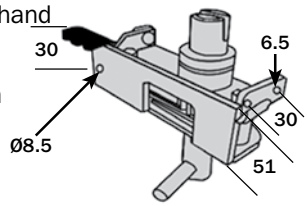

- Round slotted shaft: Ø25mm
- Grease nipple
- 3 Fixing points
- Auxiliary release handle

CURTAIN TENSIONERS

Heavy Duty Curtain Tensioner
Zinc Plated / Gold Passivation

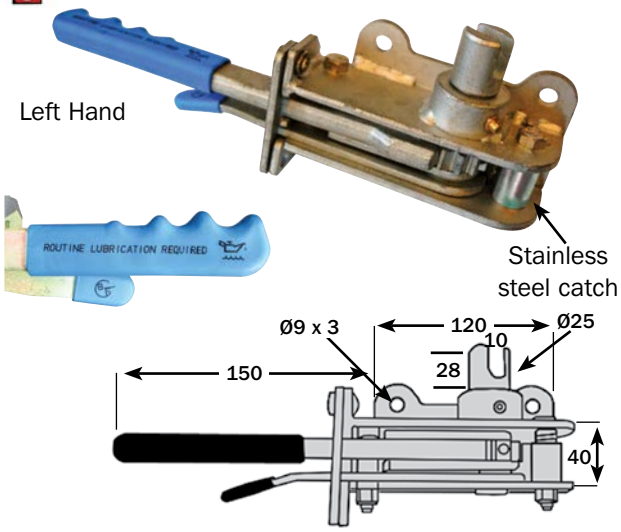

No. CARGCBF505/40LH Left hand
No. CARGCBF505/40RH Right hand
wgt. 2.10kg each

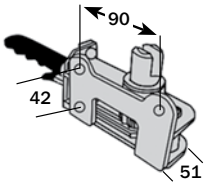

- Round slotted shaft: Ø25mm
- Grease nipple
- 3 Fixing points

Heavy Duty Curtain Tensioner
Geomet 500 Finish

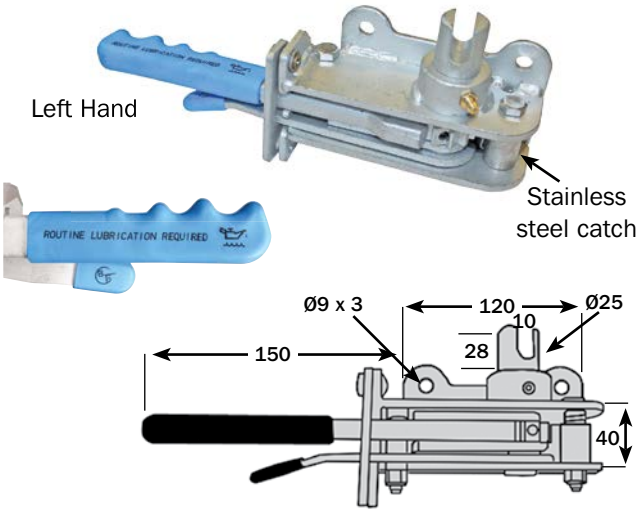

No. CARGCBF515/40LH Left hand
No. CARGCBF515/40RH Right hand
wgt. 2.10kg each

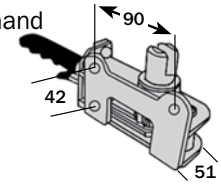

- Round slotted shaft: Ø25mm
- Grease nipple
- 3 Fixing points
- Geomet 500 offers excellent resistance to road salt, solvent & other corrosive elements

Cotter & Wire Assembly
505 Range

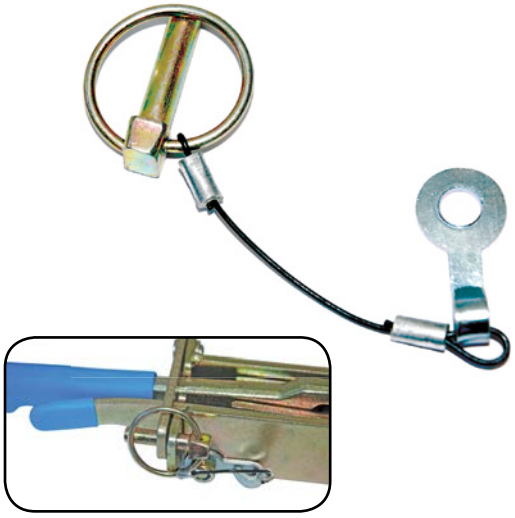

No. CARGCBF505/CWA
wgt. 0.03kg each

- Safety security device
- Suits: **CARGCBF505/SLLH** & **RH**
  CARGCBF505/40LH & **RH**
  CARGCBF505/LH & **RH**
  CARGCBF515/40LH & **RH**
- Easy to fit

Heavy Duty Curtain Tensioner
Zinc Plated / Gold Passivation

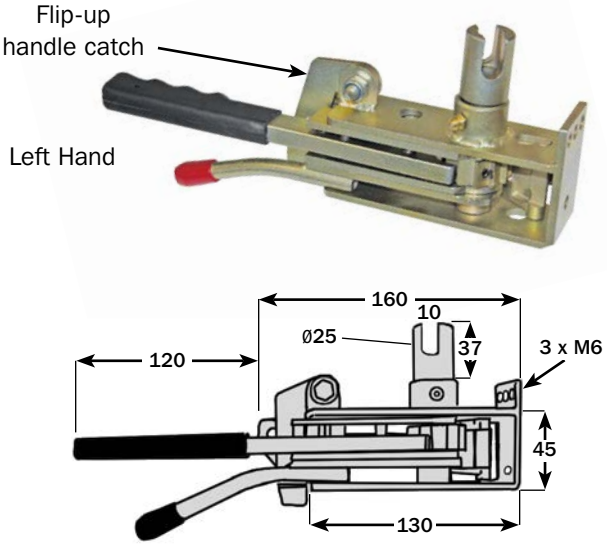

No. CARGCBF525/COLH Left hand
No. CARGCBF525/CORH Right hand
wgt. 1.52kg each

- Round slotted shaft: Ø25mm
- Grease nipple
- 4 Fixing points
- 'Flip-up' handle catch
- Compact design

Welwyn Garden City tel +44 (0)1707 371161 fax +44 (0)1707 372603
Coseley tel +44 (0)121 520 0100 fax +44 (0)121 522 3889
website www.cbf.uk.com e-mail: sales@cbf.uk.com

CURTAIN TENSIONERS

Heavy Duty Curtain Tensioner
Zinc Plated / Gold Passivation

Left Hand

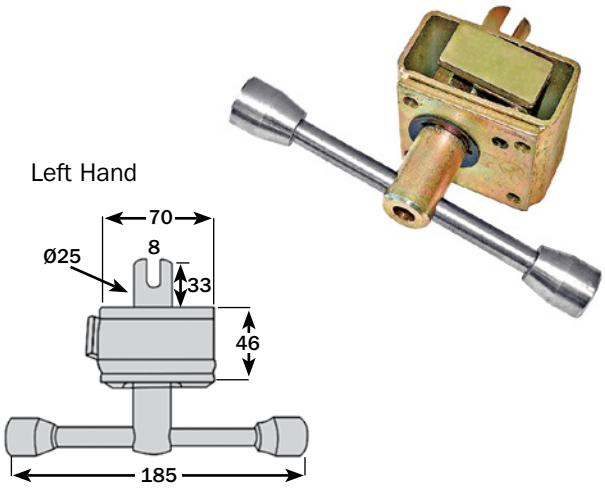

No. CARGCBF506T/LH Left hand
No. CARGCBF506T/RH Right hand
wgt. 2.00kg each

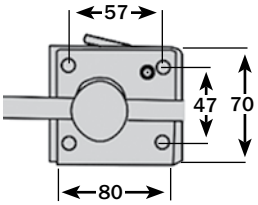

- L80 x W70 x D46mm
- Round slotted shaft: Ø25mm
- 304G Stainless steel handle
- 4 x M8 Threaded fixing holes

Heavy Duty Curtain Tensioner
Zinc Plated / Gold Passivation

Left Hand

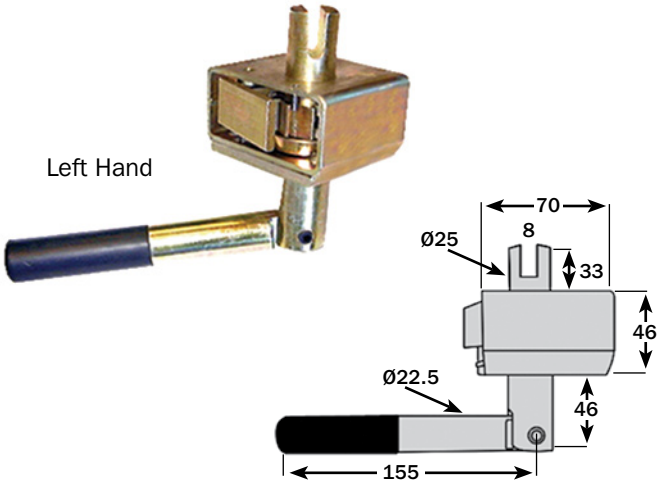

No. CARGCBF506/LH Left hand
No. CARGCBF506/RH Right hand
wgt. 1.60kg each

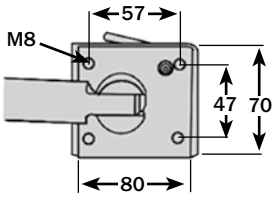

- L80 x W70 x D46mm
- Round slotted shaft: Ø25mm
- 4 x M8 Threaded fixing holes

Universal Tensioner Handle
Zinc Plated / Gold Passivation

Universal

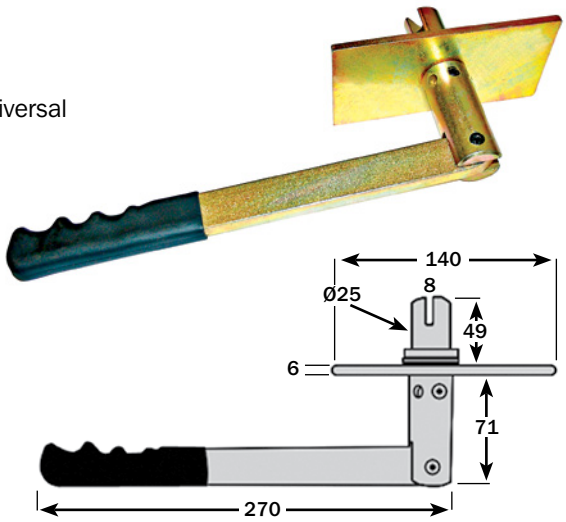

No. CARGCBF507 Universal
wgt. 1.48kg each

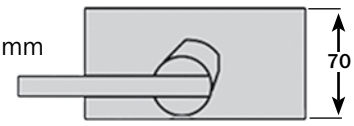

- Plate: 140 x 70mm
- Round slotted shaft: Ø25mm
- Handle: L270mm
- Nylon bushed
- Suitable for left and right hand fitment

Medium Duty Curtain Tensioner
Zinc Plated / Gold Passivation

Left Hand

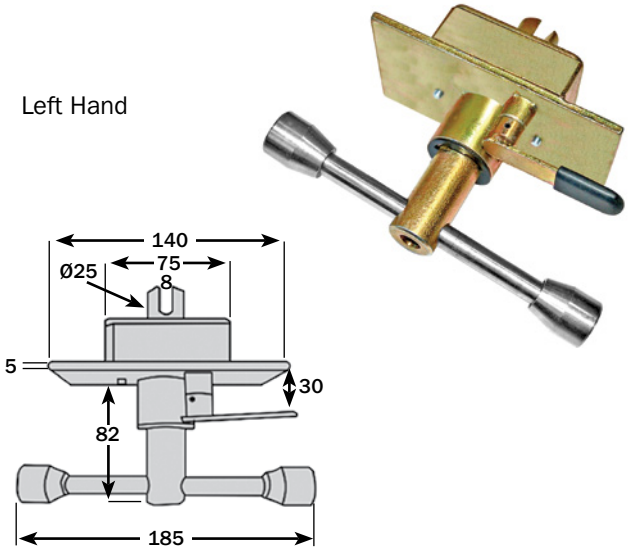

No. CARGCBF508/LH Left hand
No. CARGCBF508/RH Right hand
wgt. 1.80kg each

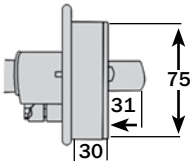

- Plate: 140 x 75mm
- Round slotted shaft: Ø25mm
- 304G Stainless steel handle
- Enclosed body

Welwyn Garden City tel +44 (0)1707 371161 fax +44 (0)1707 372603
Coseley tel +44 (0)121 520 0100 fax +44 (0)121 522 3889
website www.cbf.uk.com e-mail: sales@cbf.uk.com

DOOR MECHANISMS

22mm Un-bushed Door Locking Mechanism
Zinc Plated

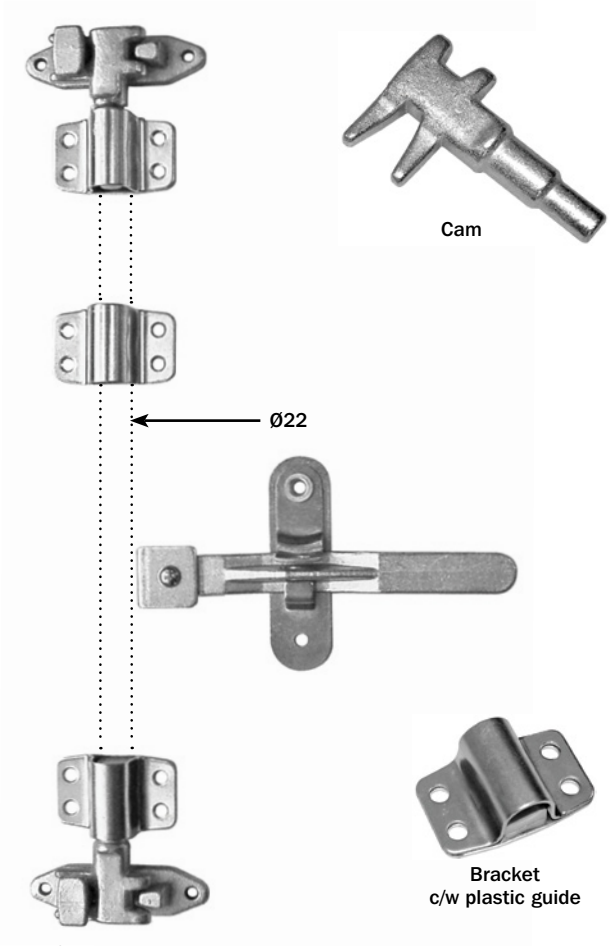

Complete set, as shown above

No. LKGR2022/UB
wgt. 2.90kg
Component set as shown complete with forged handle

- Suits both left and right hand doors
- Spare parts available to order

No. LKGR22/3000GV
Galvanized tube to suit
(see page 268)

Comm Lock ~ Premium Range 27mm Bushed Door Locking Mechanism
Galvanized

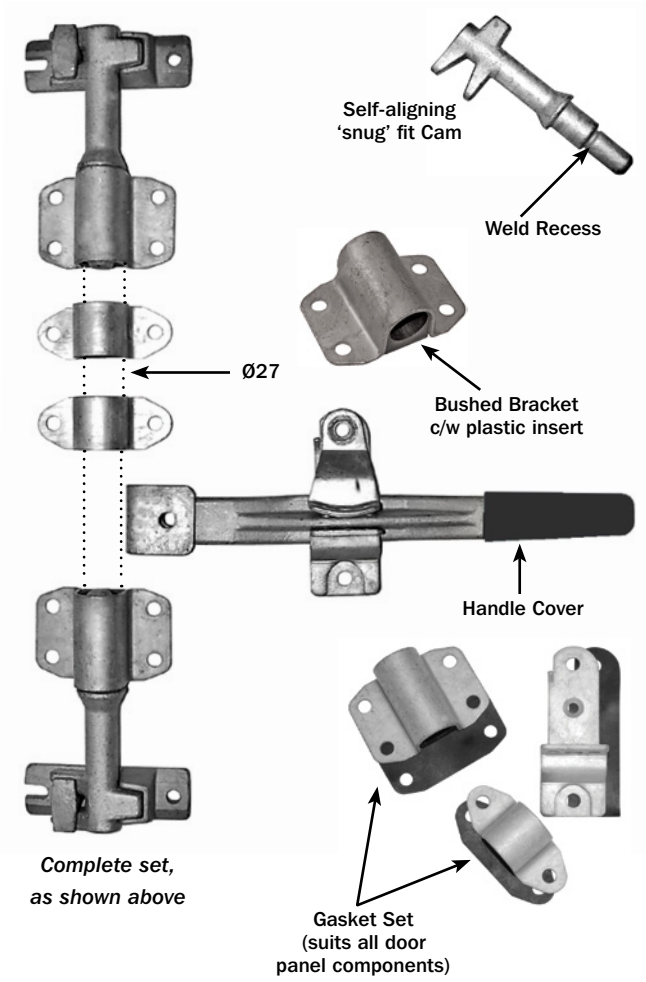

Complete set, as shown above

No. LKGR2027/BUGV
wgt. 4.60kg
Component set as shown complete with forged handle, handle cover and gasket set (5 parts, 1mm rubber)

- Suits both left and right hand doors
- Gasket set provides a barrier between components and door panel face
- Bushed brackets (plastic inserts) to aid operation
- Robust galvanized finish – can be used unpainted
- Good gather, excellent anti rack properties
- Investment cast cam & keepers
- Spare parts available to order

No. LKGR27/3000GV
Galvanized tube to suit
(see page 268)

Welwyn Garden City tel +44 (0)1707 371161 fax +44 (0)1707 372603
Coseley tel +44 (0)121 520 0100 fax +44 (0)121 522 3889
website www.cbf.uk.com e-mail: sales@cbf.uk.com

DOOR MECHANISMS

Comm-Lock ~ Standard Range 27mm Un-bushed Door Locking Mechanism
Zinc Plated

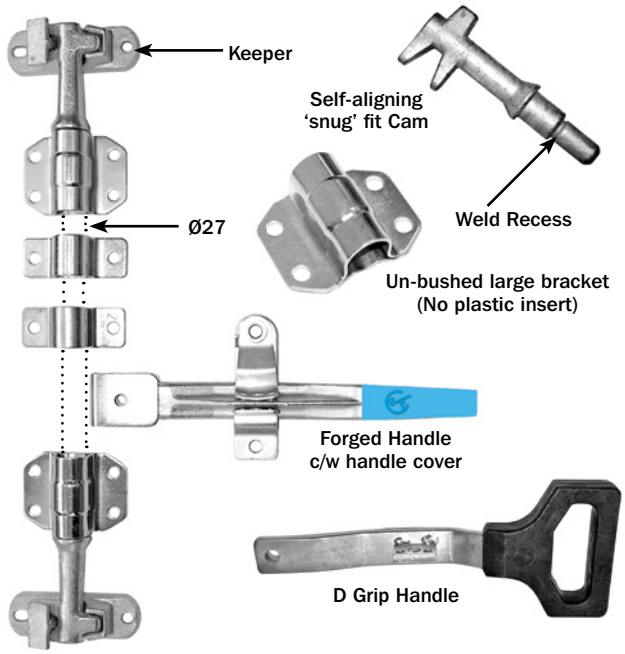

Complete set, as shown above

No. LKGR2027/UB
wgt. 4.62kg
Component set as shown complete with forged handle and handle cover

No. LKGR2027/UBDG
wgt. 5.00kg
Component set as shown complete with 'D' grip handle

- Suits both left and right hand doors
- Choice of Handles: Forged or 'D' grip
- Un-bushed brackets (no plastic inserts)
- Good gather, excellent anti-rack properties

No. LKGR2027/BUGS Gasket set (5 parts)

No. LKGR27/3000GV Galvanized tube to suit

(see page 268)

Part No.	Description	wgt.
LKGR2027/CAM	Cam only. Zinc plated	0.85kg
LKGR2027/KEP	Keeper only. Zinc plated	0.63kg
LKGR2027/FH	Forged handle only. Zinc plated	0.82kg
LKGR2027/DG	'D' grip handle only. Zinc plated	1.40kg
LKGR2027/HRM	Handle retainer mechanism. Includes: hub, catch, retainer, spacer & rivet	0.56kg
LKGR2027/UB/SBKT/ZP	Small bracket. Zinc plated	0.12kg
LKGR2027/UB/LBKT/ZP	Large bracket. Zinc plated	0.23kg

Comm-Lock ~ Standard Range 27mm Bushed Door Locking Mechanism
Zinc Plated

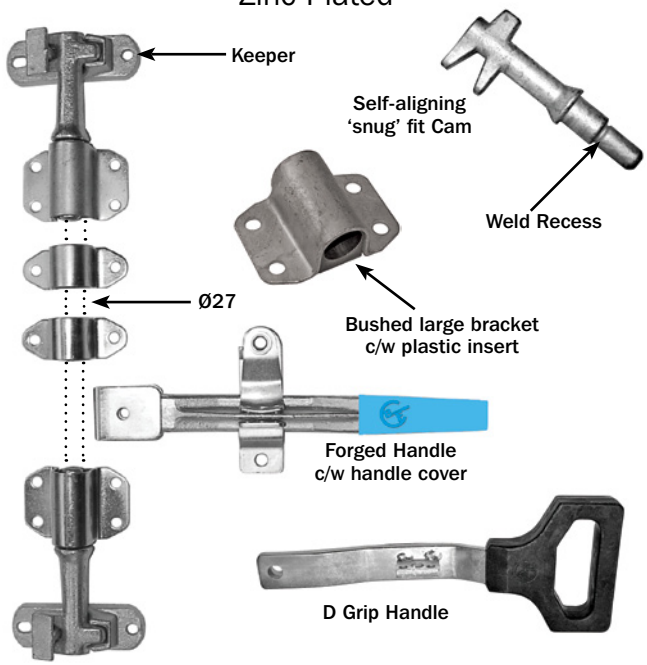

Complete set, as shown above

No. LKGR2027/BU
wgt. 4.62kg
Component set as shown complete with forged handle and handle cover

No. LKGR2027/BUDG
wgt. 5.00kg
Component set as shown complete with 'D' grip handle

- Suits both left and right hand doors
- Choice of handles: Forged or 'D' grip
- Bushed brackets (plastic inserts) to aid operation
- Good gather, excellent anti-rack properties

No. LKGR2027/BUGS Gasket set (5 parts)

No. LKGR27/3000GV Galvanized tube to suit

(see page 268)

Part No.	Description	wgt.
LKGR2027/CAM	Cam only. Zinc plated	0.85kg
LKGR2027/KEP	Keeper only. Zinc plated	0.63kg
LKGR2027/FH	Forged handle only. Zinc plated	0.82kg
LKGR2027/DG	'D' grip handle only. Zinc plated	1.40kg
LKGR2027/HRM	Handle retainer mechanism. Includes: hub, catch, retainer, spacer & rivet	0.56kg
LKGR2027/BU/SBKT/ZP	Small bracket. Zinc plated	0.13kg
LKGR2027/BU/LBKT/ZP	Large bracket. Zinc plated	0.24kg

DOOR MECHANISMS

Pre-Welded Comm-Lock~Standard Range 27mm Un-bushed Door Locking Mechanism

Galvanized / Pre-welded

Fully welded except the top cam which can be welded at required height

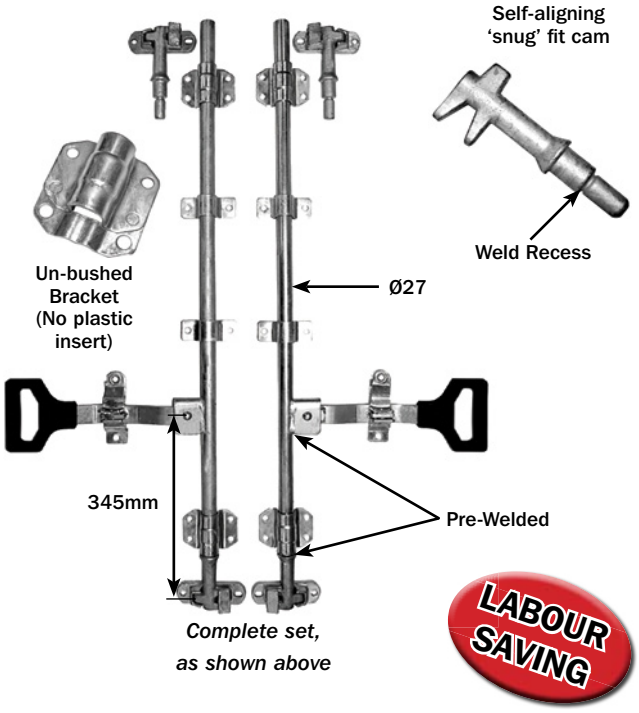

No. LKGR27/345UDGLR 1 set

wgt. 19.50kg

3mtr x Ø27mm tube

Fixed bottom cam – pre-welded

Handle welded at 345mm from the centre of bottom cam

- Labour saving
- 'D' Grip handle
- Supplied in pairs: 1 x left hand set
  1 x right hand set
- Durable galvanized finish
- Self aligning 'snug fit' Cam

No. LKGR2027/BUGS Gasket set (5 parts)

! It is recommended that a zinc rich, cold galvanising solution is used to protect the top cam weld.

Specification sheets available upon request

Part No.	Description	wgt.
LKGR2027/CAM	Cam only. Zinc plated	0.85kg
LKGR2027/KEP	Keeper only. Zinc plated	0.63kg
LKGR2027/FH	Forged handle only. Zinc plated	0.82kg
LKGR2027/DG	'D' grip handle only. Zinc plated	1.40kg
LKGR2027/HRM	Handle retainer mechanism. Includes: hub, catch, retainer, spacer & rivet	0.56kg
LKGR2027/UB/SBKT/ZP	Small bracket. Zinc plated	0.12kg
LKGR2027/UB/LBKT/ZP	Large bracket. Zinc plated	0.23kg

Pre-Welded Comm-Lock~Standard Range 27mm Un-bushed Door Locking Mechanism

Galvanized / Pre-welded

Fully welded except the top cam which can be welded at required height

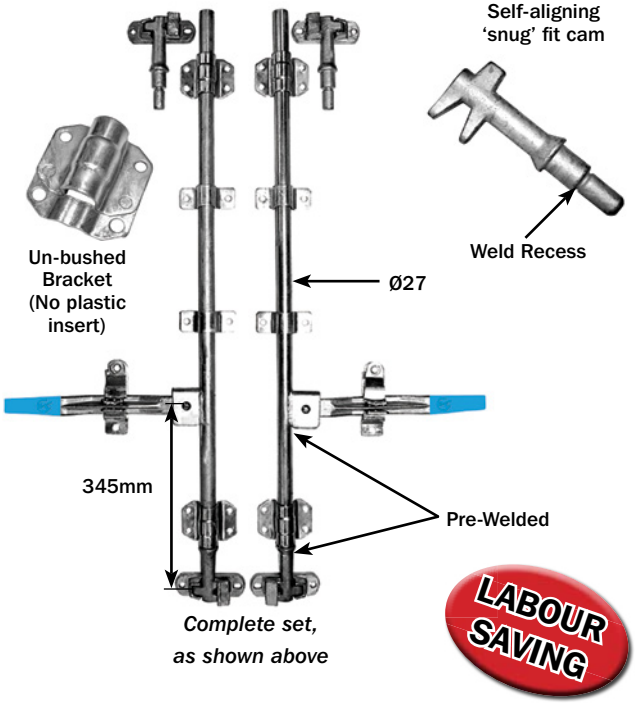

No. LKGR27/345UFHLR 1 set

wgt. 19.50kg

3mtr x Ø27mm tube

Fixed bottom cam – pre-welded

Handle welded at 345mm from the centre of bottom cam

- Labour saving
- Forged handle complete with handle cover
- Supplied in pairs: 1 x left hand set
  1 x right hand set
- Durable galvanized finish
- Self aligning 'snug fit' Cam

No. LKGR2027/BUGS Gasket set (5 parts)

! It is recommended that a zinc rich, cold galvanising solution is used to protect the top cam weld.

Specification sheets available upon request

Part No.	Description	wgt.
LKGR2027/CAM	Cam only. Zinc plated	0.85kg
LKGR2027/KEP	Keeper only. Zinc plated	0.63kg
LKGR2027/FH	Forged handle only. Zinc plated	0.82kg
LKGR2027/DG	'D' grip handle only. Zinc plated	1.40kg
LKGR2027/HRM	Handle retainer mechanism. Includes: hub, catch, retainer, spacer & rivet	0.56kg
LKGR2027/BU/SBKT/ZP	Small bracket. Zinc plated	0.13kg
LKGR2027/BU/LBKT/ZP	Large bracket. Zinc plated	0.24kg

Welwyn Garden City tel +44 (0)1707 371161 fax +44 (0)1707 372603
Coseley tel +44 (0)121 520 0100 fax +44 (0)121 522 3889
website www.cbf.uk.com e-mail: sales@cbf.uk.com

DOOR MECHANISMS

27mm Bushed Door Locking Mechanism
'Loose Sets'
Stainless Steel

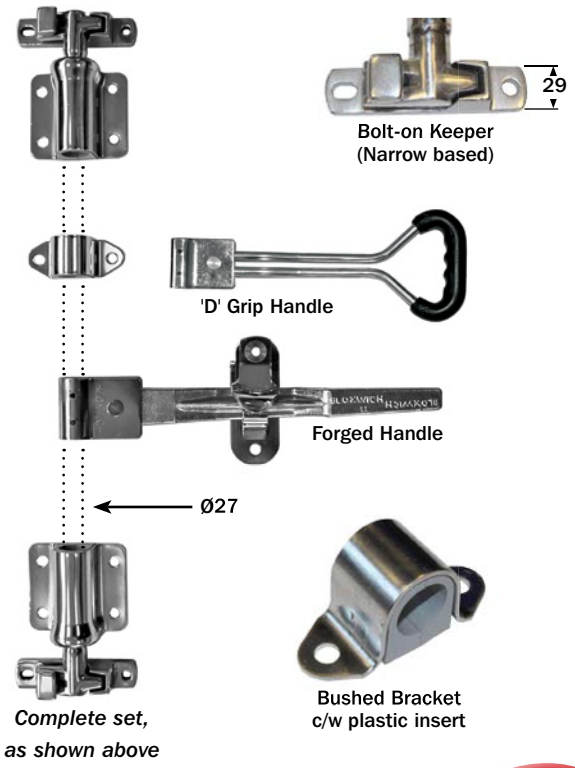

STAINLESS STEEL

No. LKGR2010N/PG
wgt. 3.95kg
Full set complete with 'D' Grip handle

No. LKGR2010N
wgt. 3.75kg
Full set complete with forged handle

- Suits both left and right hand doors
- Choice of handles – Forged or 'D' grip
- Bushed brackets (plastic insert)
- Stainless steel – Corrosion resistant
- Narrow based keepers, 29mm wide, bolt-on
- Kits supplied with one small bracket – Extra brackets available

Optional

No. LKGR/BCSP14094/V2
wgt. 0.14kg
Small bracket only

- Spares available upon request

No. LKGR27/2500SS
Stainless steel tube to suit – 2500mm
(see page 268)

No. LKGR27/3000SS
Stainless steel tube to suit – 3000mm
(see page 268)

27mm Bushed Door Locking Mechanism
'Fully Welded'
Stainless Steel

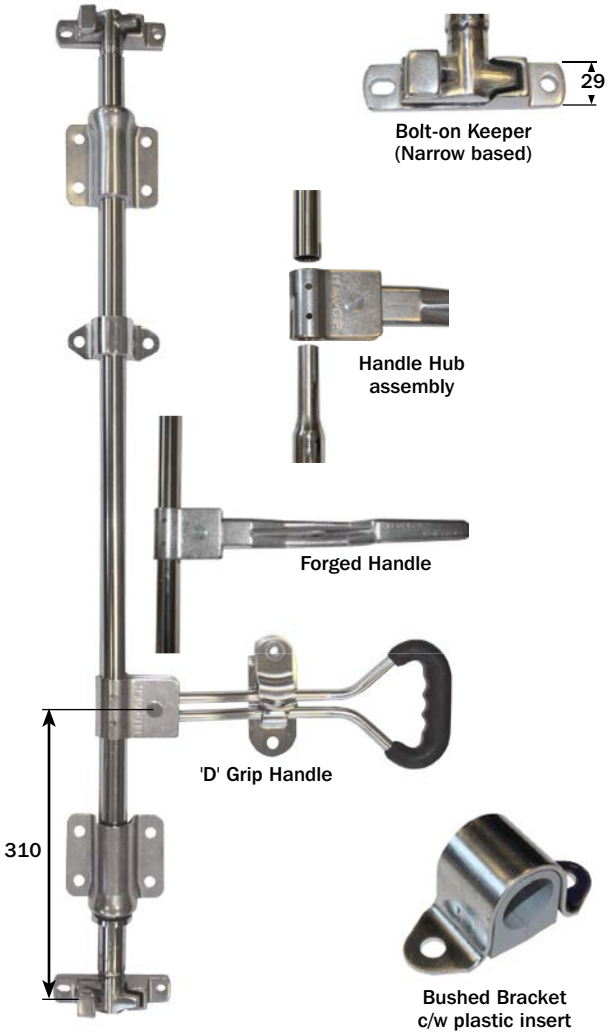

STAINLESS STEEL

No. LKGR2010N/VPG
wgt. 8.15kg
Full set complete with 'D' Grip handle

No. LKGR2010N/VFH
wgt. 8.15kg
Full set complete with forged handle
Simply cut the top of the tube to the desired length and fasten together

- Narrow based keeper
- Tube included
- No welding required, cam pre-welded to tube
- Bushed brackets (plastic inserts) to aid operation
- Choice of handles: Forged or 'D' grip
- Suits both left and right hand doors
- Sold singly

DOOR MECHANISMS

34mm Bushed Door Locking Mechanism
'Loose sets'
Zinc Plated

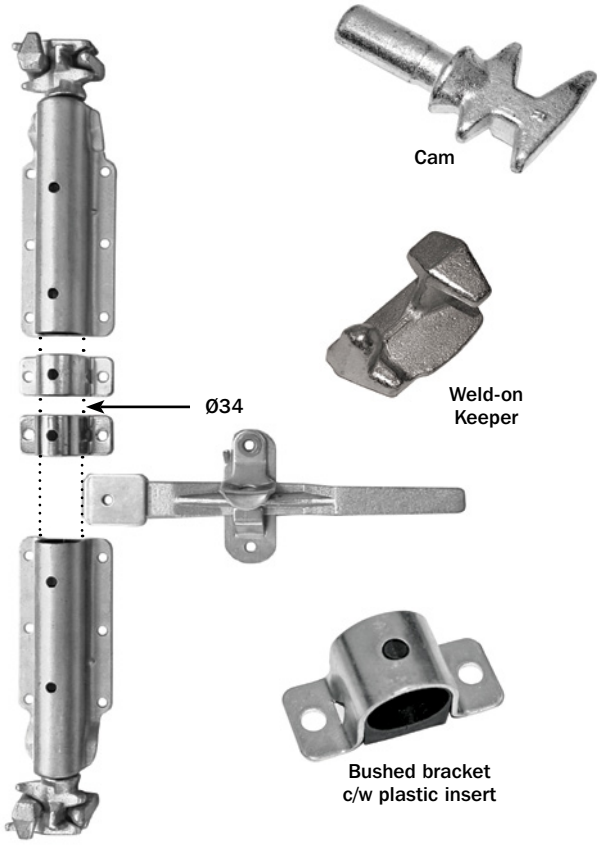

Complete set, as shown above

No. LKGR2034/BU
wgt. 5.21kg
Full set complete with forged handle and weld-on keepers

- Heavy Duty design
- Suits both left and right hand doors
- Bushed brackets (plastic inserts) to aid operation
- Spares available upon request

No. LKGR34/3000GV
Galvanized tube to suit
(see page 268)

IMPORTANT

Zinc plating is only classed as a 'sacrificial' coating (gives itself up to the corrosive media). A protective barrier (i.e. paint) is recommended to protect against moisture.

CBF cannot be held responsible for the effects of corrosion on zinc plated parts.

Surface Mount Slam Latch
Complete with Inside Safety Release
Chromium Plated

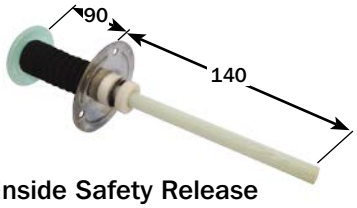

Inside Safety Release

No. RFAS60 Complete set (3 parts)
wgt. 1.52kg

- Suitable for flush-fit doors
- Smooth slam action, inside release with fluorescent 'mushroom' head for good visibility and fast operation
- Bright chromium plated, zinc alloy
- Complete with 2 keys
- Ø6.5mm Fixing holes

3-Way Rod Latch
Zinc Plated

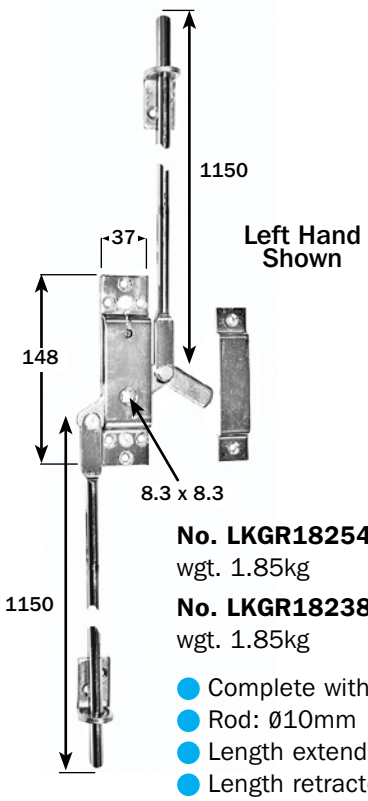

No. LKGR18254/LH Left Hand
wgt. 1.85kg

No. LKGR18238/RH Right Hand
wgt. 1.85kg

- Complete with 2 x rod guides & keeper
- Rod: Ø10mm
- Length extended: 2264mm
- Length retracted: 2230mm
- Tongue length: 45mm

Welwyn Garden City tel +44 (0)1707 371161 fax +44 (0)1707 372603
Coseley tel +44 (0)121 520 0100 fax +44 (0)121 522 3889
website www.cbf.uk.com e-mail: sales@cbf.uk.com

DOOR MECHANISMS

Horsebox Ramp Closing Mechanism
Stainless Steel

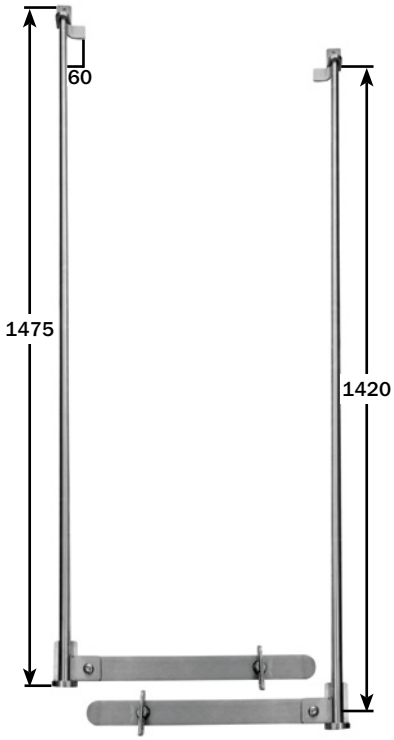

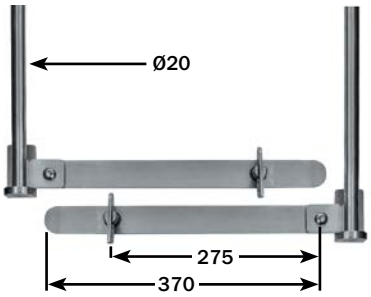

Off-set handle

No. LKGR20/1475FHLR/SS Flat handle
wgt. 10.00kg

No. LKGR20/1475OSHLR/SS Off-set handle
wgt. 10.00kg

- Complete set consists of:
  1 x Pair of 20mm solid stainless steel bars complete with either flat or off-set handle. 1420mm Cam centres.
  4 x Mounting brackets & fixing screws
  2 x Droplock on plates

P280

P220-229

P132-137

P55-57

DOOR MECHANISMS

Recessed Door Locks – Suits Ø16mm Tube
Stainless Steel

'1031' Plus Range

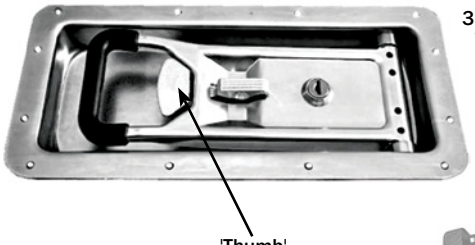

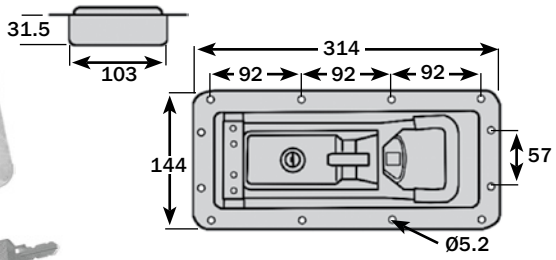

No. MRF202730203
wgt. 1.32kg

- Recessed locking handle
- 304G Stainless steel
- 31.5mm Deep pan c/w 2 keys
- Internal release not available

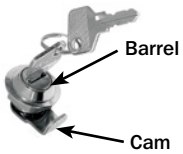

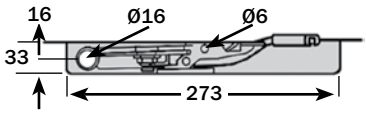

No. MRF301050101 Replacement locking barrel & 2 keys
No. MRF202130205 Replacement locking barrel cam

'Breogan' Range

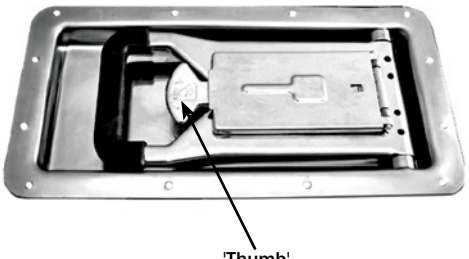

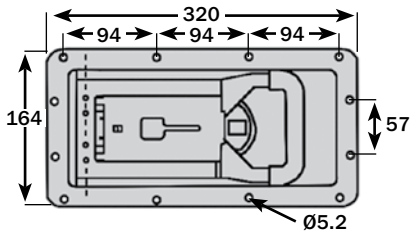

No. MRF202580253
wgt. 1.83kg

- Recessed locking handle
- 304G Stainless steel
- 25mm Deep pan + key cover & 2 keys
- Internal release not available

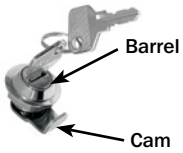

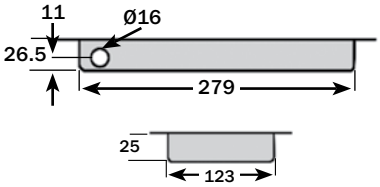

No. MRF301050101 Replacement locking barrel & 2 keys
No. MRF202120205 Replacement locking barrel cam

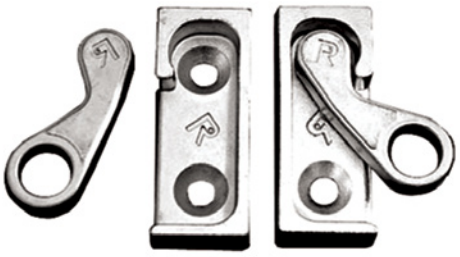

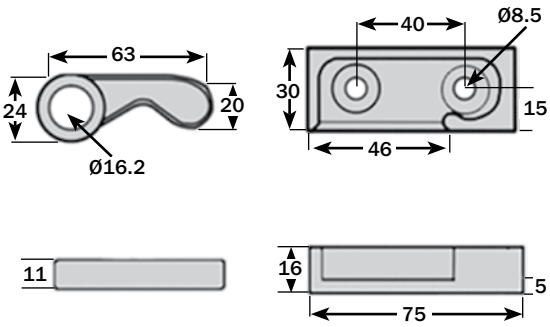

No. MRF204060243
wgt. 0.38kg

- Cam & keeper set
- Investment cast
- 304G Stainless steel
- 2 cams & keepers per set

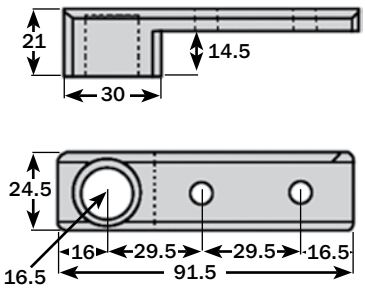

No. MRF301010633
wgt. 0.03kg
Black nylon tube guides

- 2 per set

(see page 268 for 16mm tube)

Welwyn Garden City tel +44 (0)1707 371161 fax +44 (0)1707 372603
Coseley tel +44 (0)121 520 0100 fax +44 (0)121 522 3889
website www.cbf.uk.com e-mail: sales@cbf.uk.com

DOOR MECHANISMS

ULISES RANGE

Recessed Door Locks – Suits Ø16mm Tube
Stainless Steel

No. MRF202330254
wgt. 1.67kg

- Recessed locking handle
- 304G Stainless steel
- 29mm Deep pan + key cover & 2 keys
- Direct opening system
- Supplied with gasket
- Internal release to suit: **MRF202740680**

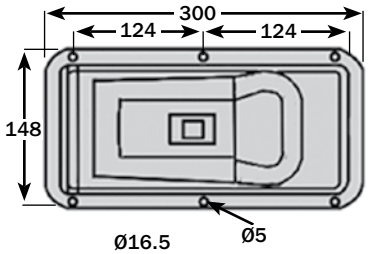

No. MRF301050101
Replacement locking barrel & 2 keys
No. MRF202320204
Replacement locking barrel cam

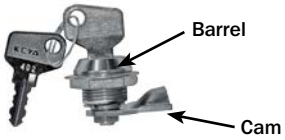

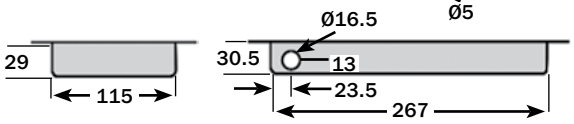

No. MRF202320254
wgt. 1.64kg

- Recessed locking handle
- 304G Stainless steel
- 25.6mm Deep pan + key cover & 2 keys
- Direct opening system
- Supplied with gasket
- Internal release to suit: **MRF202740680**

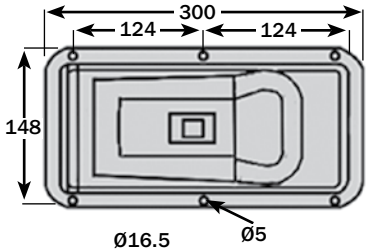

No. MRF301050101
Replacement locking barrel & 2 keys
No. MRF202320204
Replacement locking barrel cam

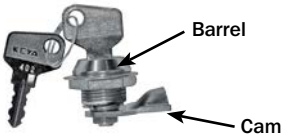

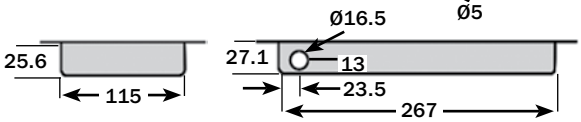

No. MRF204060243
wgt. 0.38kg

- Cam & keeper set
- Investment cast
- 304G Stainless steel
- 2 cams & keepers per set

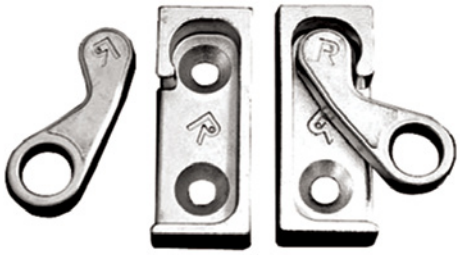

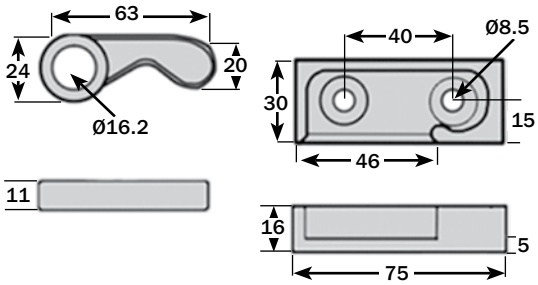

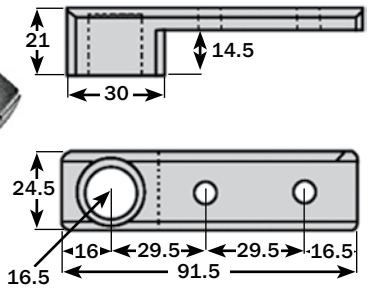

No. MRF301010633
wgt. 0.03kg
Black nylon tube guides

- 2 per set

(see page 268 for 16mm tube)

Internal Release

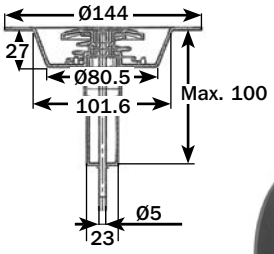

No. MRF202740680
wgt. 0.10kg
Internal 'Push' release
set to suit 'ULISES' recessed range – Ø16

- Suitable for door thickness up to 100mm
- Complete with illuminous handle

DOOR MECHANISMS

Recessed Door Locks – Suits Ø16mm Tube
Zinc Plated

Important *Zinc plating is only classed as a 'sacrificial' coating (gives itself up to the corrosive media). A protective barrier, (i.e. paint) is recommended to protect against moisture. CBF cannot be held responsible for the effects of corrosion on zinc plated parts*

'1031' Plus Range

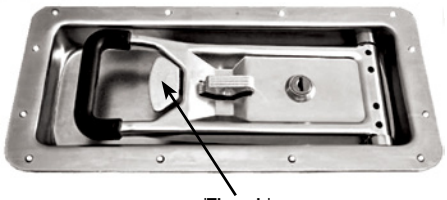

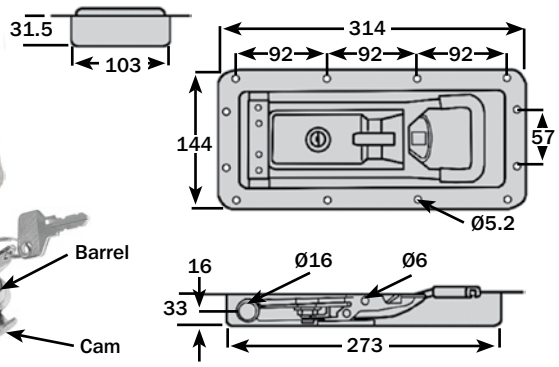

No. MRF202730103
wgt. 1.32kg

- Recessed locking handle
- Zinc plated
- 31.5mm deep pan complete with 2 keys

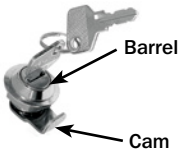

No. MRF301050101 Replacement locking barrel & 2 keys
No. MRF202130205 Replacement locking barrel cam

'Breogan' Range

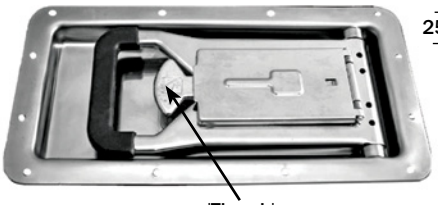

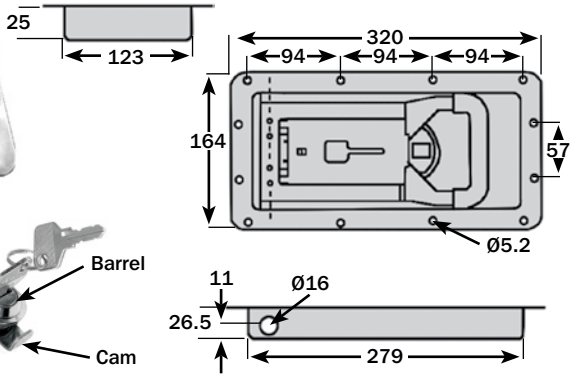

No. MRF202580153
wgt. 1.83kg

- Recessed locking handle
- Zinc plated
- 25mm Deep pan + key cover & 2 keys
- Internal release not available

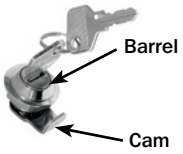

No. MRF301050101 Replacement locking barrel & 2 keys
No. MRF202120205 Replacement locking barrel cam

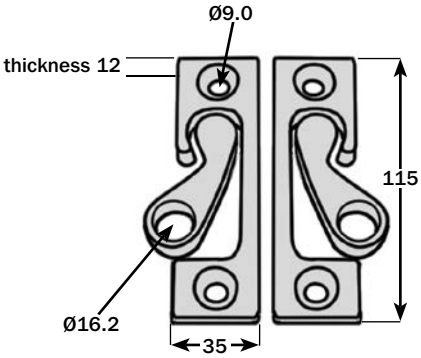

No. MRF204060143
wgt. 0.61kg

- Cam & keeper set
- Investment cast keepers / steel cams
- Zinc plated
- 2 Cams & keepers per set

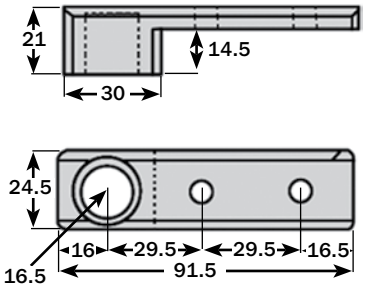

No. MRF301010633
wgt. 0.03kg
Black nylon tube guides

- 2 per set

(see page 268 for 16mm tube)

Welwyn Garden City tel +44 (0)1707 371161 fax +44 (0)1707 372603
Coseley tel +44 (0)121 520 0100 fax +44 (0)121 522 3889
website www.cbf.uk.com e-mail: sales@cbf.uk.com

DOOR MECHANISMS

External Door Locks – Suits Ø22mm Tube
Stainless Steel

'LIR' Range

No. MRF202960253
wgt. 1.66kg

- External locking handle
- 304G Stainless steel
- Key cover & 2 keys
- Internal release to suit: **MRF202740680**

No. MRF301050101 Replacement locking Barrel & 2 keys

No. MRF202200205 Replacement locking Barrel Cam

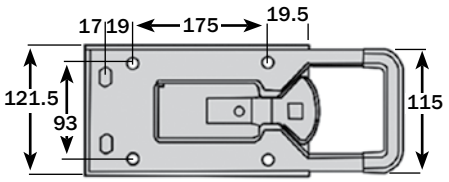

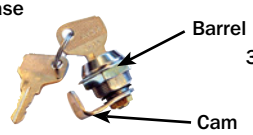

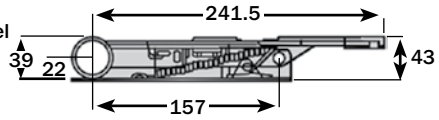

'ULISES' Range

No. MRF202930253
wgt. 2.25kg

- External locking handle
- 304G Stainless steel
- Direct opening – pull system
- Key cover & 2 keys
- Internal release to suit: **MRF202930601**

No. MRF301050101 Replacement locking Barrel & 2 keys

No. MRF202930250 Replacement locking Barrel Cam

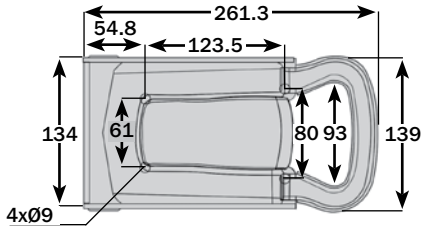

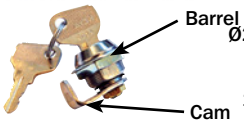

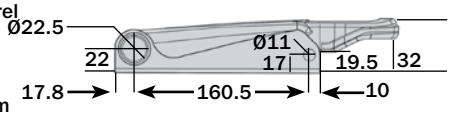

No. MRF204100261
wgt. 1.20kg/set
Cam & Keeper Set

- Investment cast
- 304G Stainless steel
- Compact model
- 2 Cams & keepers per set

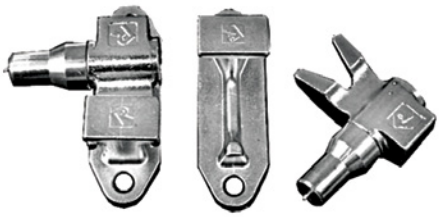

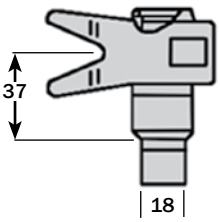

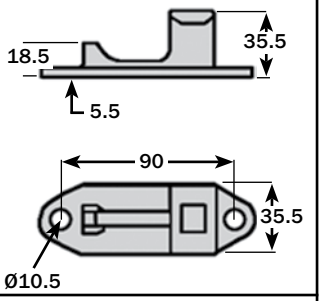

No. MRF203020266
wgt. 0.93kg/set
Tube Clamp Set, 3 piece

- Ø22mm
- 304G Stainless steel
- 3 Brackets (2 large, 1 intermediate)
- 3 Back plates & 3 sets of bushes

(see page 268 for 22mm tube)

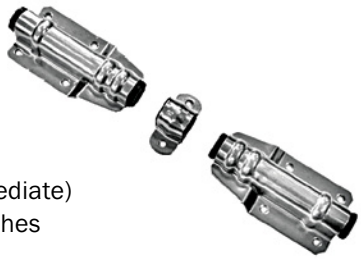

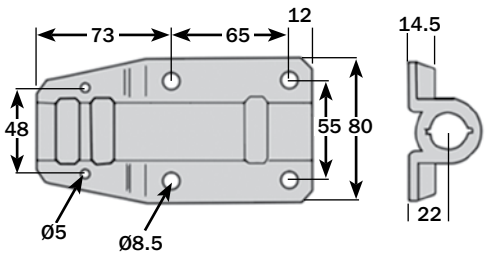

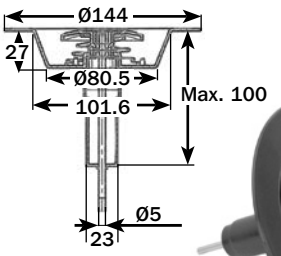

No. MRF202740680
wgt. 0.10kg
Internal 'Push' release
set to suit 'LIR' range

- Suitable for door thickness up to 100mm
- Complete with illuminous handle

Internal Release

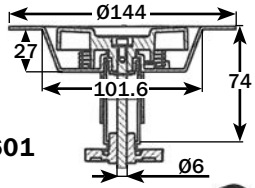

No. MRF202930601
wgt. 0.11kg
Internal 'Twist' release set
to suit 'ULISES' range – Ø22

- Suitable for door thickness up to 70mm
- Complete with illuminous handle

DOOR MECHANISMS

External Door Locks – Suits Ø27mm Tube
Stainless Steel

'LIR' Range

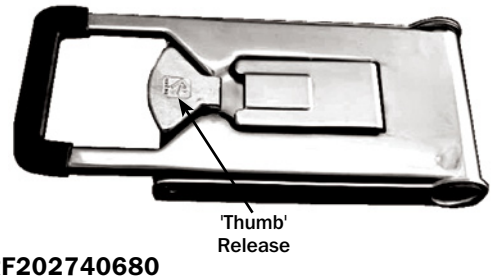

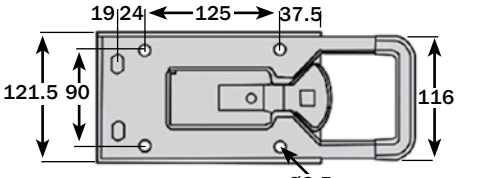

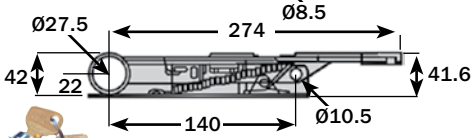

No. MRF202950253
wgt. 1.82kg

- External locking handle
- 304G Stainless steel
- Key cover & 2 keys
- Internal release to suit: **MRF202740680**

No. MRF301050101 Replacement locking Barrel & 2 keys

No. MRF202200205 Replacement locking Barrel Cam

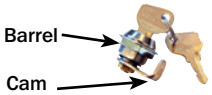

'ULISES' Range

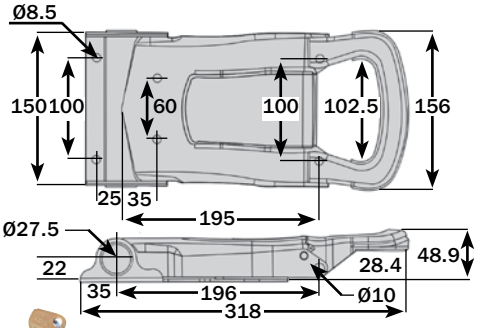

No. MRF202940253
wgt. 2.45kg

- External locking handle
- 304G Stainless steel
- Direct opening – pull system
- Key cover & 2 keys
- Internal release to suit: **MRF202940601**

No. MRF301050101 Replacement locking Barrel & 2 keys

No. MRF202940250 Replacement locking Barrel Cam

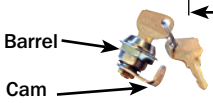

No. MRF204110246
wgt. 1.98kg/set
Cam & Keeper Set

- 304G Stainless steel
- 2 Cams & Keepers per set

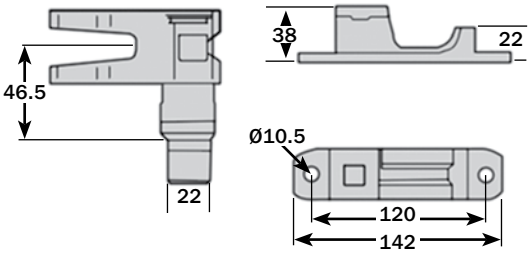

No. MRF203020209
wgt. 1.42kg/set
Tube Clamp Set, 4 piece

- Ø27mm
- 304G Stainless steel
- 4 Brackets (2 large, 2 intermediate)
- 4 Back plates & 4 sets of bushes

(see page 268 for 27mm tube)

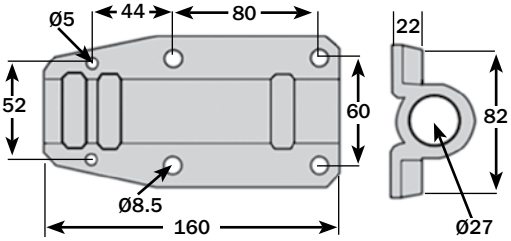

No. MRF202740680
wgt. 0.10kg
Internal 'Push' release
set to suit 'LIR' range

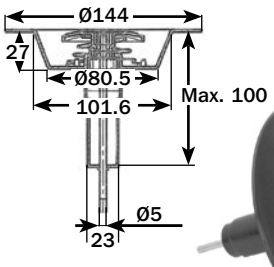

- Suitable for door thickness up to 100mm
- Complete with illuminous handle

No. MRF202940601
wgt. 0.11kg
Internal 'Twist' release set
to suit 'ULISES' range – Ø27mm

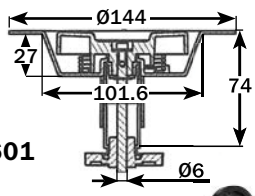

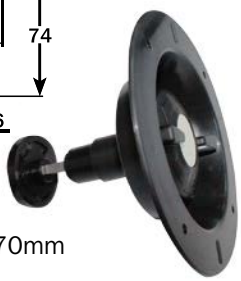

- Suitable for door thickness up to 70mm
- Complete with illuminous handle

Welwyn Garden City tel +44 (0)1707 371161 fax +44 (0)1707 372603
Coseley tel +44 (0)121 520 0100 fax +44 (0)121 522 3889
website www.cbf.uk.com e-mail: sales@cbf.uk.com

DOOR PANELS

Aluminium Faced Door Panels
Heavy Duty

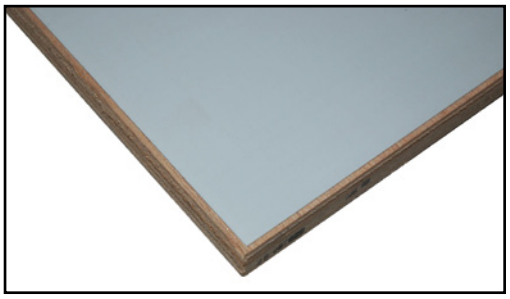

No. PLY8418/PAGDB L2440 x W1220 x D19/20mm
wgt. 46.00kg

No. PLY9418/PAGDB L2745 x W1220 x D19/20mm
wgt. 50.00kg

No. PLY10418/PAGDB L3048 x W1220 x D19/20mm
wgt. 56.00kg

No. PLY11418/PAGDB L3355 x W1220 x D19/20mm
wgt. 61.60kg

- 0.90mm 5754 H46 Pre-Primed aluminium exterior
- 0.50mm Galvanized steel interior face
- Multi-Ply 18mm core
- Labour saving
- Smooth painting surface

! All edges and holes must be sealed during fitment. Failure to do this can lead to de-lamination problems due to water ingress

Melamine Faced Door Panels
Medium Duty

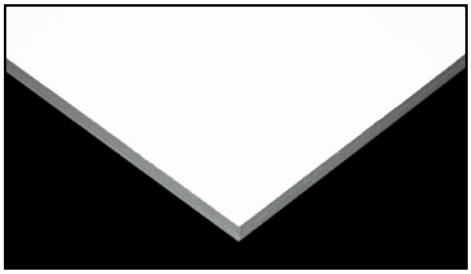

No. PLY8418/WGMDB L2440 x W1220 x D18mm
wgt. 38.00kg

No. PLY9418/WGMDB L2745 x W1220 x D18mm
wgt. 43.00kg

- 13 ply 'Finnish' Birch plywood
- 440gm Smooth white paintable face
- 220gm Smooth grey interior face
- Cost effective

! All edges and holes must be sealed during fitment. Failure to do this can lead to de-lamination problems due to water ingress

GRP Faced Door Panels
Heavy Duty – Panolit 'CPR'

No. PLY8420/GRP L2440 x W1220 x D20mm
wgt. 37.50kg

No. PLY9420/GRP L2745 x W1220 x D20mm
wgt. 43.00kg

No. PLY10420/GRP L3048 x W1220 x D20mm
wgt. 46.90kg

- Plywood core coated on both sides with white glassfibre reinforced polyester resin
- Multi-ply wooden core

! All edges and holes must be sealed during fitment. Failure to do this can lead to de-lamination problems due to water ingress

DOOR SEALS

Door Seal
Dimension Chart

Door seals are manufactured from Impact Modified Rigid PVC, carriers co-extruded with nitrile rubber/PVC seals

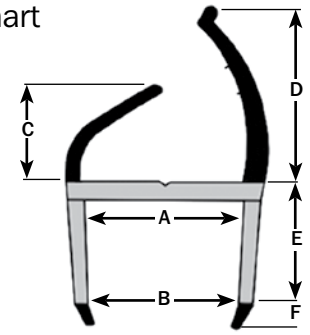

SECTION	A	B	C	D	E	F
18mm	19	18	14	25.5	17	2.5
19mm	20	19	14	25.5	17	2.5
21mm	21	21	14	25.5	17	2.5
27mm	27	25	13.5	28	21	3.0
30mm	31	29	14	29	25	---
42mm	42	40	14	29	25	---
55mm	55	53	14	30	27	---
65mm	67	65	14	30	27	---
83mm	83	80	14	38	25	2.5
85mm	85	83	14	28	22	---

Door Seal
Corner Pieces

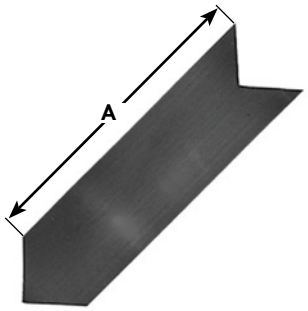

No. RUSLCBF/CP/65B Black
wgt. 0.28kg/pack 100
A = 65mm

- Suits outer flipper

No. RUSLCBF/CP/40BLK Black
wgt. 0.17kg/pack 100
A = 40mm

- Suits inner flipper

No. RUSLCBF/CP/GREY Grey
wgt. 0.28kg/pack 100
A = 65mm

- Suits outer flipper

Door Seal
18mm

No. RUSLCBF18/16
wgt. 1.80kg
18mm x 5mtr

- Black flippers/white carrier

Door Seal
19mm

No. RUSLCBF19/4M
wgt. 1.48kg
19mm x 4mtr

- Black flippers/white carrier

No. RUSLCBF19/16
wgt. 1.85kg
19mm x 5mtr

- Black flippers/white carrier

Door Seal Carrier
19mm

No. RUSLCBF19/CP3M
wgt. 0.50kg
19mm x 3mtr

- White carrier only

Welwyn Garden City tel +44 (0)1707 371161 fax +44 (0)1707 372603
Coseley tel +44 (0)121 520 0100 fax +44 (0)121 522 3889
website www.cbf.uk.com e-mail: sales@cbf.uk.com

DOOR SEALS

Door Seal
21mm

No. RUSLCBF21/16
wgt. 1.90kg
21mm x 5mtr

- Black flippers/white carrier

Door Seal
27mm

No. RUSLCBF27/5M
wgt. 2.10kg
27mm x 5mtr

- Black flippers/white carrier

Refrigeration Door Seal
30mm

No. RUSLCBF30/5MG
wgt. 2.40kg
30mm x 5mtr

- Grey flippers/grey carrier

Refrigeration Door Seal
42mm

No. RUSLCBF42/5MG
wgt. 2.60kg
42mm x 5mtr

- Grey flippers/grey carrier

Refrigeration Door Seal
55mm

No. RUSLCBF55/5MG
wgt. 3.10kg
55mm x 5mtr

- Grey flippers/grey carrier

No. RUSLCBF55/5M
wgt. 3.10kg
55mm x 5mtr

- Black flippers/white carrier

Refrigeration Door Seal
65mm

No. RUSLCBF65/5MG
wgt. 3.60kg
65mm x 5mtr

- Grey flippers/grey carrier

No. RUSLCBF65/5MB
wgt. 3.60kg
65mm x 5mtr

- Black flippers/white carrier

DOOR SEALS

Refrigeration Door Seal
83mm

No. RUSLCBF83/5MB
wgt. 3.60kg
83mm x 5mtr

- Black flippers/white carrier

No. RUSLCBF83/5MG
wgt. 3.60kg
83mm x 5mtr

- Grey flippers/grey carrier

Refrigeration Door Seal
85mm

No. RUSLCBF85/50G
wgt. 3.80kg
85mm x 5mtr

- Grey flippers/grey carrier

No. RUSLCBF85/25
wgt. 1.90kg
85mm x 2.5mtr

- Black flippers/white carrier

No. RUSLCBF85/27
wgt. 2.05kg
85mm x 2.7mtr

- Black flippers/white carrier

Rain Guard Strip

NO. RUSL1136/2550B
wgt. 0.17kg
Size: L2550 x W25 x D16mm

- Black rigid carrier / flexible flipper
- Diverts water away from the top edge of doors

Custom Seals & Cappings

Custom Seals & Cappings can be produced to suit most applications

(subject to minimum order quantity)

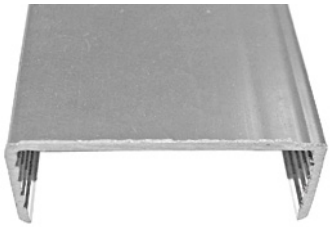

Welwyn Garden City tel +44 (0)1707 371161 fax +44 (0)1707 372603
Coseley tel +44 (0)121 520 0100 fax +44 (0)121 522 3889
website www.cbf.uk.com e-mail: sales@cbf.uk.com

DROPLOCKS

Typical Droplock application

Droplock Fastener
Bolt On
Zinc Plated

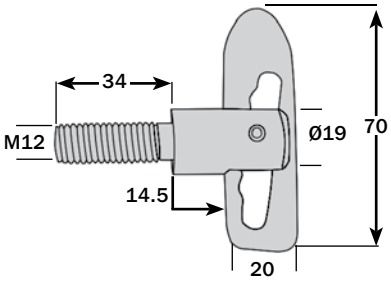

No. DROP89
wgt. 0.11kg
19mm neck / 12 x 34mm shank
No nut

● To suit 14mm ironwork

'Mini' Droplock Fastener
Bolt On
Zinc Plated

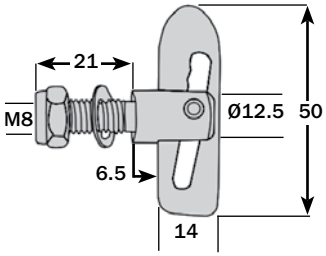

No. DROP85
wgt. 0.04kg
12.5mm neck / 8 x 21mm shank
Nyloc nut & washer

● To suit 6mm ironwork

'Mini' Droplock Fastener
Bolt On
Zinc Plated

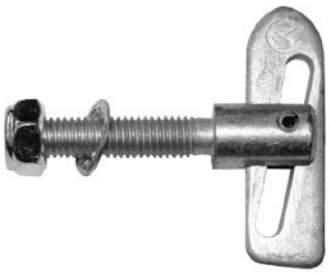

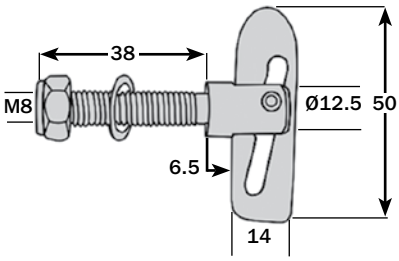

No. DROP85/38
wgt. 0.05kg
12.5mm neck / 8 x 38mm shank
Nyloc nut & washer

● To suit 6mm ironwork

'Mini' Droplock Fastener
Bolt On
304 Grade Stainless Steel

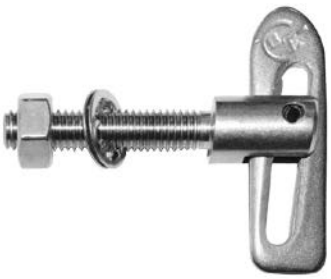

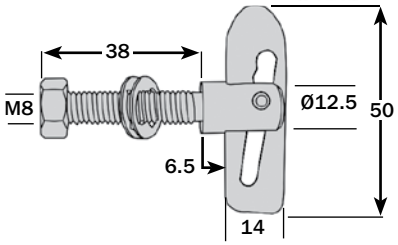

No. DROP85/38SS
wgt. 0.05kg
12.5mm neck / 8 x 38mm shank
Nut & 2 washers

● To suit 6mm ironwork

'Mini' Droplock Fastener
Bolt On
Zinc Plated

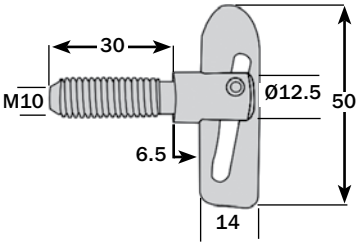

No. DROP85/3010
wgt. 0.04kg
Large diameter thread
12.5mm neck / 10 x 30mm shank

● To suit 6mm ironwork

DROPLOCKS

Droplock Fastener
Weld On
Zinc Plated

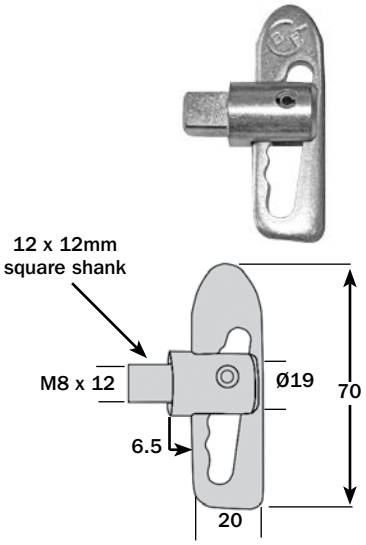

No. DROP43
wgt. 0.08kg
19mm neck / 12mm square shank
Shank drilled and tapped 8mm
Internal thread on shank

- To suit 6mm ironwork

Droplock Fastener
Bolt On
Zinc Plated

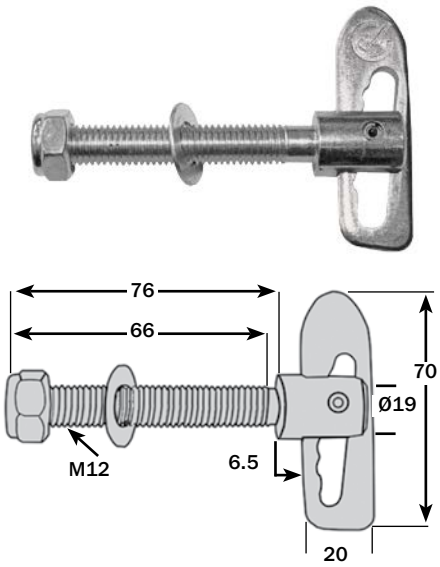

No. DROP25
wgt. 0.14kg
19mm neck / 12 x 76mm shank
Nyloc nut & washer

- To suit 6mm ironwork

Droplock Fastener
Weld On
Zinc Plated & Self colour

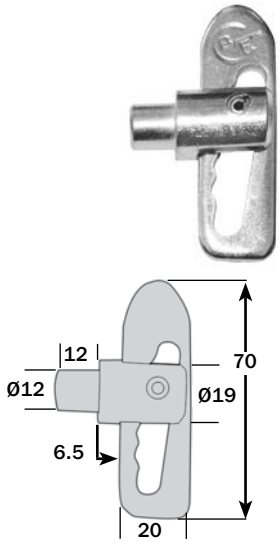

No. DROP32 Zinc Plated
No. DROP32/SC Self Colour
wgt. 0.09kg
19mm neck / 12 x 12mm shank

- To suit 6mm ironwork

Droplock Fastener
Bolt On
Zinc Plated

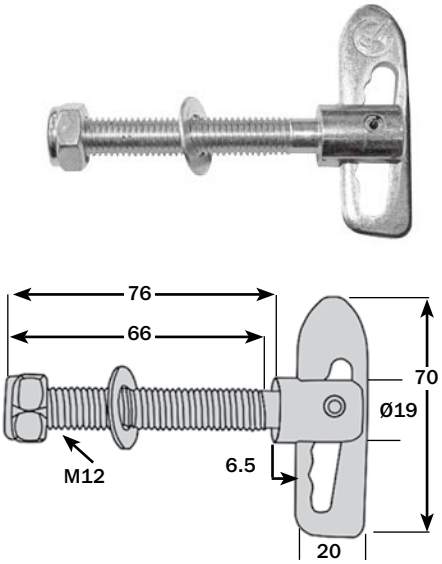

No. DROP44
wgt. 0.16kg
19mm neck / 12 x 76mm shank
Including slotted keyway, nyloc nut & washer

- To suit 6mm ironwork

Droplock Fastener
Bolt On
Zinc Plated & Stainless Steel

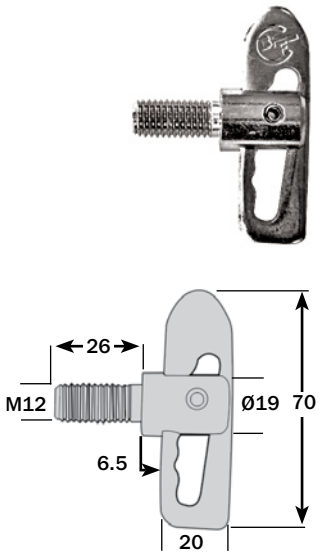

No. DROP63 Zinc Plated
No. DROP63/SS Stainless Steel
wgt. 0.10kg
19mm neck / 12 x 26mm shank

- To suit 6mm ironwork

'Mini' Droplock Fastener
Weld On
Zinc Plated

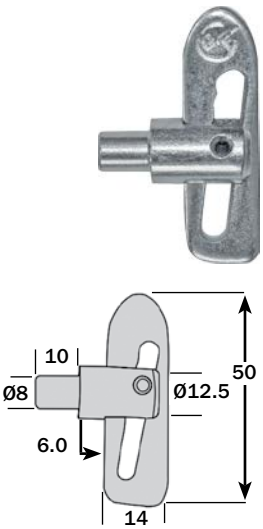

No. DROP74
wgt. 0.03kg
12.5mm neck / 8 x 10mm shank

- To suit 6mm ironwork

Welwyn Garden City tel +44 (0)1707 371161 fax +44 (0)1707 372603
Coseley tel +44 (0)121 520 0100 fax +44 (0)121 522 3889
website www.cbf.uk.com e-mail: sales@cbf.uk.com

DROPLOCKS

Droplock Fastener
Bolt On
Zinc Plated

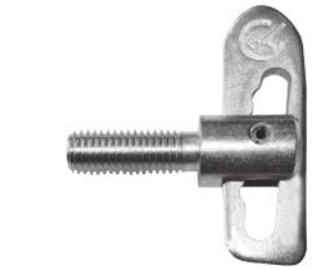

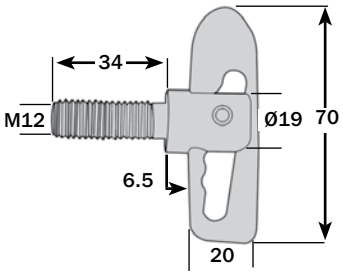

No. DROP75
wgt. 0.10kg
19mm neck / 12 x 34mm shank

- To suit 6mm ironwork

Droplock Fastener
Bolt On
Zinc Plated

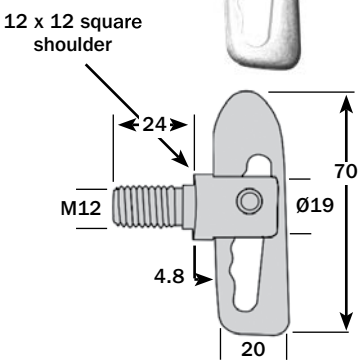

No. DROP45
wgt. 0.09kg
19mm neck / 12 x 24mm shank
12 x 12mm square shoulder

- To suit 4.8mm ironwork

Brewery Fastener
Gold Passivated

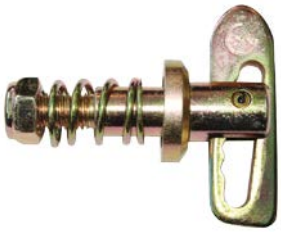

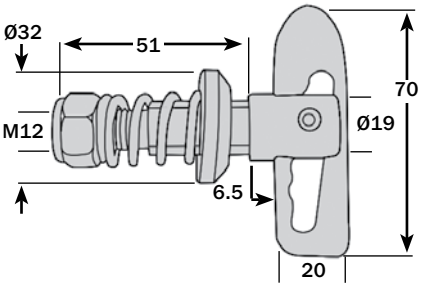

No. DROP84
wgt. 0.18kg
Spring loaded
Nyloc nut

- To suit 19mm i.d. Tubular Side Rail & 6mm ironwork

Droplock Fastener
Weld On
Zinc Plated

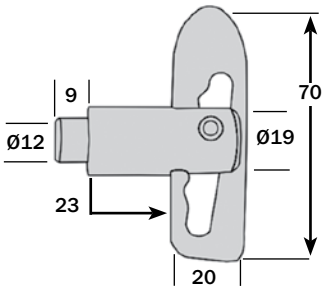

No. DROP65
wgt. 0.12kg
19mm neck / 12 x 9mm shank

- To suit 22mm ironwork

Spacing Washers & Nuts
Zinc Plated

DROP3254/RD

DROP3046

No. DROP3254/RD
wgt. 0.33kg/200
Washer x 200
Thickness: 1mm

No. DROP3046
wgt. 0.01kg
12mm Nyloc Nut

Droplock Fastener
On Plate
Zinc Plated

No. DROP32/PLATE/ZP
wgt. 0.19kg
DROP32 Pre-welded to a bolt-on plate
Plate size: L75 x W40 x D5mm

- 2 x Ø6.5mm Fixing holes

ELECTRICAL – CABLE

Automotive Cable
'Thin-Wall'

- Thin-wall Auto Cables are produced in accordance with ISO6722:2006 (Class B) with a 105°C rating.
- Manufactured from 'high temperature-hard grade' PVC, offering greater reduction in weight and size.
- This cable has replaced the old type PVC cables produced to BS6862 with a 70°C rating which are no longer supported by B.S.I.
- Other benefits of using Thin-wall cable include higher amp rating on smaller cables and greater abrasion resistance.

Single Core Auto Cables

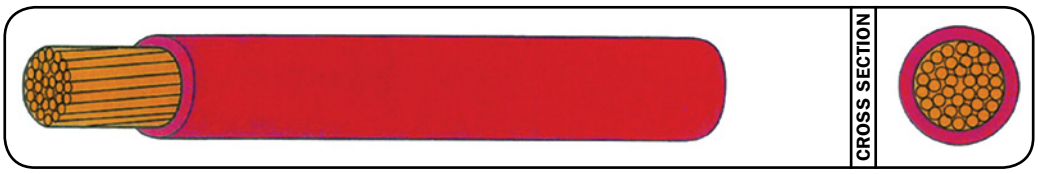

Part No.	Conductor specification (mm)	Conductor Cross Section (mm2)	Nominal Current Rating (Amps)	Maximum Overall Diameter of Cable (mm)	Maximum Loading (Watts)		Resistance per Metre at 20°C (Ohms)	Roll Size* (metres)
					12 volts	24 volts		
CABLTW1.0	32/0.20	1.0	16.5	2.1	198	396	0.0185	100
CABLTW2.0	28/0.30	2.0	25.0	2.8	300	600	0.00942	100
CABLTW3.0	44/0.30	3.0	33.0	3.4	396	792	0.00600	100
CABLTW4.5	65/0.30	4.5	42.0	4.1	504	1008	0.00406	100

No. CABLTW1.0/100BLK 100mtr Black Sheath
wgt: 1.16kg/roll

No. CABLTW1.0/100BLU 100mtr Blue Sheath
wgt: 1.16kg/roll

No. CABLTW1.0/100RED 100mtr Red Sheath
wgt: 1.16kg/roll

No. CABLTW1.0/100WHT 100mtr White Sheath
wgt: 1.16kg/roll

No. CABLTW2.0/100BLK 100mtr Black Sheath
wgt: 2.22kg/roll

No. CABLTW2.0/100RED 100mtr Red Sheath
wgt: 2.22kg/roll

**500mtr Drums are available upon request*

No. CABLTW3.0/100BLK 100mtr Black Sheath
wgt: 3.35kg/roll

No. CABLTW3.0/100RED 100mtr Red Sheath
wgt: 3.35kg/roll

No. CABLTW4.5/100BLK 100mtr Black Sheath
wgt: 4.39kg/roll

No. CABLTW4.5/100RED 100mtr Red Sheath
wgt: 4.39kg/roll

Welwyn Garden City tel +44 (0)1707 371161 fax +44 (0)1707 372603
Coseley tel +44 (0)121 520 0100 fax +44 (0)121 522 3889
website www.cbf.uk.com e-mail: sales@cbf.uk.com

ELECTRICAL – CABLE

Automotive Cable
'Thin-Wall'

Twin Core Auto Cable (Flat Twin)

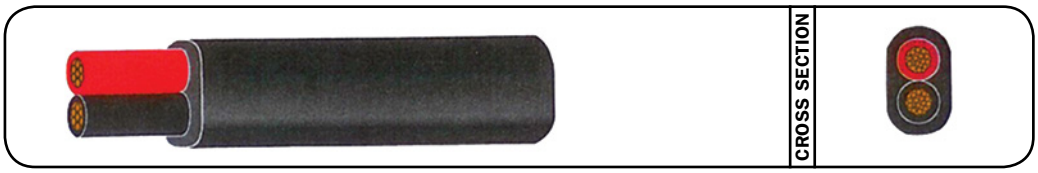

Part No.	Conductor specification (mm)	Conductor Cross Section (mm2)	Nominal Current Rating (Amps)	Maximum Overall Diameter of Cable (mm)	Sheath Colour	2 Core Colours	Roll Size (metres)
CABLTW02/04	2 x 24/0.20	2 x 0.75	14.0	3.5 x 5.5	Black	Red, Black	30 100
CABLTW02/01	2 x 32/0.20	2 x 1.00	16.5	3.5 x 5.5	Black		30 100
CABLTW02/01	2 x 32/0.20	2 x 1.00	16.5	3.5 x 5.5	Red		100
CABLTW02/02	2 x 28/0.30	2 x 2.00	25.0	3.8 x 6.2	Black		30 100
CABLTW02/08	2 x 44/0.30	2 x 3.00	33.0	4.4 x 7.6	Black		30 100

No. CABLTW02/04/30BRB 30mtr Black Sheath
wgt: 1.06kg/roll 2 Core Colours

No. CABLTW02/04/100BRB 100mtr Black Sheath
wgt: 3.50kg/roll 2 Core Colours

No. CABLTW02/01/30BRB 30mtr Black Sheath
wgt: 1.11kg/roll 2 Core Colours

No. CABLTW02/01/100BRB 100mtr Black Sheath
wgt: 3.70kg/roll 2 Core Colours

No. CABLTW02/01/100BBRW 100mtr Black Sheath
wgt: 3.70kg/roll 2 Core Colours (Brown/White)

No. CABLTW02/02/30BRB 30mtr Black Sheath
wgt: 1.86kg/roll 2 Core Colours

No. CABLTW02/02/100BRB 100mtr Black Sheath
wgt: 6.21kg/roll 2 Core Colours

No. CABLTW02/08/30BRB 30mtr Black Sheath
wgt: 2.69kg/roll 2 Core Colours

No. CABLTW02/08/100BRB 100mtr Black Sheath
wgt: 8.98kg/roll 2 Core Colours

3 Core Auto Cable

Part No.	Conductor specification (mm)	Conductor Cross Section (mm2)	Nominal Current Rating (Amps)	Maximum Overall Diameter of Cable (mm)	Sheath Colour	3 Core Colours	Roll Size (metres)
CABLTW03/03	3 x 24/0.20	3 x 0.75	14.0	5.6	Black	Red, Black, Green	30 100
CABLTW03/01	3 x 32/0.20	3 x 1.00	16.5	5.6	Black		30 100

No. CABLTW03/03/30B 30mtr Black Sheath
wgt: 1.66kg/roll 3 Core Colours

No. CABLTW03/03/100B 100mtr Black Sheath
wgt: 5.52kg/roll 3 Core Colours

No. CABLTW03/01/30B 30mtr Black Sheath
wgt: 1.64kg/roll 3 Core Colours

No. CABLTW03/01/100B 100mtr Black Sheath
wgt: 5.47kg/roll 3 Core Colours

ELECTRICAL – CABLE

Automotive Cable
'Thin-Wall'

4 Core Auto Cable

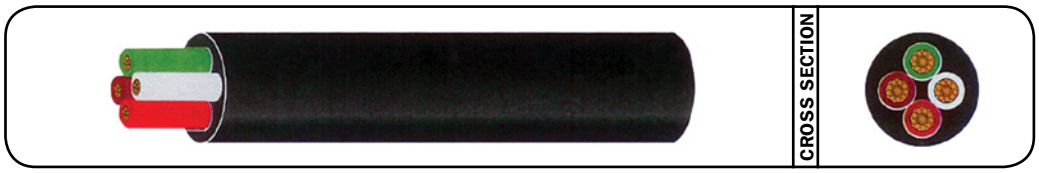

Part No.	Conductor specification (mm)	Conductor Cross Section (mm2)	Nominal Current Rating (Amps)	Maximum Overall Diameter of Cable (mm)	Sheath Colour	4 Core Colours	Roll Size (metres)
CABLTW04/01	4 x 32/0.20	4 x 1.00	16.5	5.8	Black	Brown, Green, Red, White	30 100

No. CABLTW04/01/30B 30mtr Black Sheath
wgt: 2.18kg/roll 4 Core Colours

No. CABLTW04/01/100B 100mtr Black Sheath
wgt: 7.27kg/roll 4 Core Colours

5 Core Auto Cable

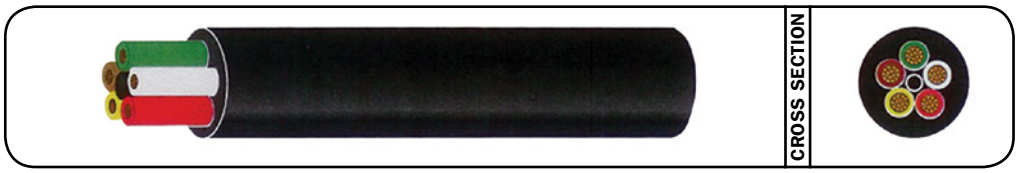

Part No.	Conductor specification (mm)	Conductor Cross Section (mm2)	Nominal Current Rating (Amps)	Maximum Overall Diameter of Cable (mm)	Sheath Colour	5 Core Colours	Roll Size (metres)
CABLTW05/01	5 x 32/0.20	5 x 1.00	16.5	6.3	Black	Brown, Green, Red, White, Yellow	30 100

No. CABLTW05/01/30B 30mtr Black Sheath
wgt: 2.47kg/roll 5 Core Colours

No. CABLTW05/01/100B 100mtr Black Sheath
wgt: 8.25kg/roll 5 Core Colours

7 Core Auto Cable

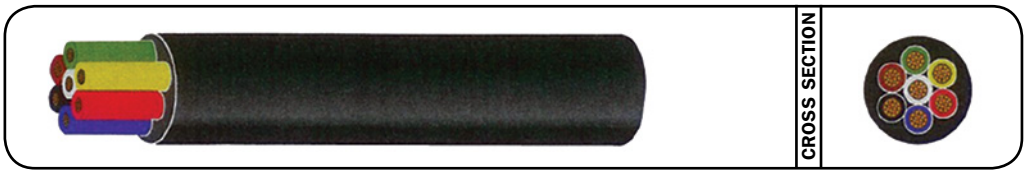

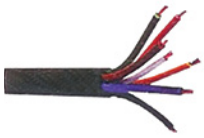

Part No.	Conductor specification (mm)	Conductor Cross Section (mm2)	Nominal Current Rating (Amps)	Maximum Overall Diameter of Cable (mm)	Sheath Colour	7 Core Colours	Roll Size (metres)
CABLTW07/01	7 x 24/0.20	7 x 0.75	14.0	6.8	Black	Red, Black, Green, Yellow, Brown, White, Blue	30 100
CABLTW07/02	6 x 32/0.20 1 x 28/0.30	6 x 1.00 1 x 2.00	16.5 25.0	7.8	Black		30 100

No. CABLTW07/01/30B 30mtr Black Sheath
wgt: 2.87kg/roll 7 Core Colours

No. CABLTW07/01/100B 100mtr Black Sheath
wgt: 9.59kg/roll 7 Core Colours

No. CABLTW07/02/30B 30mtr Black Sheath
wgt: 3.87kg/roll 7 Core Colours

No. CABLTW07/02/100B 100mtr Black Sheath
wgt: 12.92kg/roll 7 Core Colours

Welwyn Garden City tel +44 (0)1707 371161 fax +44 (0)1707 372603
Coseley tel +44 (0)121 520 0100 fax +44 (0)121 522 3889
website www.cbf.uk.com e-mail: sales@cbf.uk.com

ELECTRICAL – CABLE

Automotive Cable
'Thin-Wall'

8 Core Auto Cable

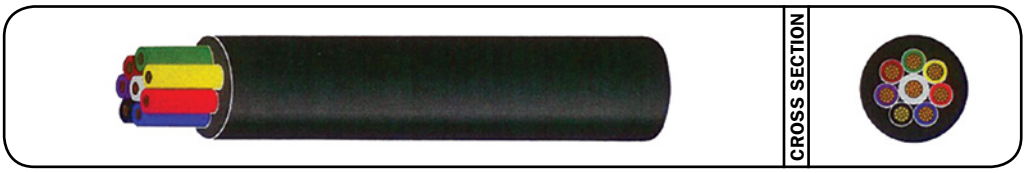

Part No.	Conductor specification (mm)	Conductor Cross Section (mm2)	Nominal Current Rating (Amps)	Maximum Overall Diameter of Cable (mm)	Sheath Colour	8 Core Colours	Roll Size (metres)
CABLTW08/01	7x 32/0.20 1 x 28/0.30	7 x 1.00 1 x 2.00	16.5 25.0	8.5	Black	Black, Red, Blue, Yellow, Purple, Brown, White, Green	50 100

No. CABLTW08/01/50B 50mtr Black Sheath
wgt: 7.31kg/roll 8 Core Colours

No. CABLTW08/01/100B 100mtr Black Sheath
wgt: 14.60kg/roll 8 Core Colours

'YY' Control Flexible Cable

- YY Control cable has a grey PVC sheath that is manufactured generally to BS6500 and VDE0250 standards.
- Voltage rating: 300-500V
- Temperature rating: Fixed: -30°C to +80°C
  Flexing: -5°C to +80°C
- Minimum bending radius: 15 x Overall diameter
- YY cable is available to order from 2 to 100 cores
- Please contact us for further information
- ***Many more specifications of cable can be ordered – please contact us for more information***

BRIGADE®

P194-203

A full range of
Vehicle Safety Solutions

To keep up-to-date with all the latest products,
visit our website:

www.cbf.uk.com

ELECTRICAL – CABLE

Automotive Cable
'Thin-Wall'

PVC Battery / Welding Cables

- Single insulated extra flexible
- Designed for use in tough working environments
- Resistant to petrol, lubricating oils and diluted acids
- Plain copper conductors – PVC insulated -30°C to +70°C

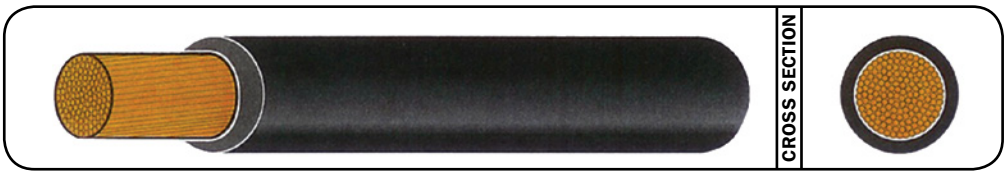

Part No.	Conductor specification (mm)	Conductor Cross Section (mm2)	Nominal Current Rating (Amps)	Maximum Overall Diameter of Cable (mm)	Sheath Colours		Roll Size (metres)		
CABLPVC16	206/0.30	16	110	8.30	Black	Red	10	30	100
CABLPVC20	266/0.30	20	135	9.00	Black	Red	10	30	100
CABLPVC25	322/0.30	25	170	10.10	Black	Red	10	30	100
CABLPVC35	451/0.30	35	240	11.80	Black	Red	10	30	100
CABLPVC40	539/0.30	40	300	12.70	Black	Red	10	30	50
CABLPVC50	640/0.30	50	345	13.50	Black	Red	10	30	50
CABLPVC60	805/0.30	60	415	15.00	Black	Red	10	30	50
CABLPVC70	905/0.30	70	485	15.40	Black	Red	10	30	50

No. CABLPVC16/100B 100mtr Black Sheath
wgt: 18.34kg/roll

No. CABLPVC16/100R 100mtr Red Sheath
wgt: 18.34kg/roll

No. CABLPVC25/30B 30mtr Black Sheath
wgt: 9.00kg/roll

No. CABLPVC25/30R 30mtr Red Sheath
wgt: 9.00kg/roll

No. CABLPVC35/30B 30mtr Black Sheath
wgt: 11.77kg/roll

No. CABLPVC35/30R 30mtr Red Sheath
wgt: 11.77kg/roll

No. CABLPVC40/30B 30mtr Black Sheath
wgt: 13.29kg/roll

No. CABLPVC40/30R 30mtr Red Sheath
wgt: 13.29kg/roll

No. CABLPVC50/30B 30mtr Black Sheath
wgt: 16.00kg/roll

No. CABLPVC50/30R 30mtr Red Sheath
wgt: 16.00kg/roll

No. CABLPVC60/30B 30mtr Black Sheath
wgt: 18.66kg/roll

No. CABLPVC60/30R 30mtr Red Sheath
wgt: 18.66kg/roll

No. CABLPVC70/30B 30mtr Black Sheath
wgt: 21.87kg/roll

No. CABLPVC70/30R 30mtr Red Sheath
wgt: 21.87kg/roll

Welwyn Garden City tel +44 (0)1707 371161 fax +44 (0)1707 372603
Coseley tel +44 (0)121 520 0100 fax +44 (0)121 522 3889
website www.cbf.uk.com e-mail: sales@cbf.uk.com

ELECTRICAL – CABLE TIES

Black Cable Tie Base
Self Adhesive

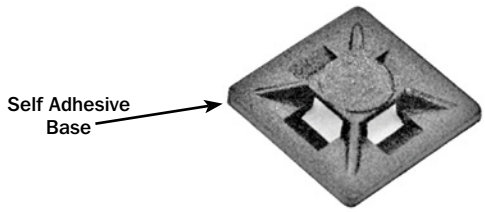

No. CABLHFC1/4BLK 20 x 20mm
wgt. 0.14kg/pack 100

- Entry: 4 way
- Max Tie width: 4.0mm

Black Cable Tie Base
Self Adhesive

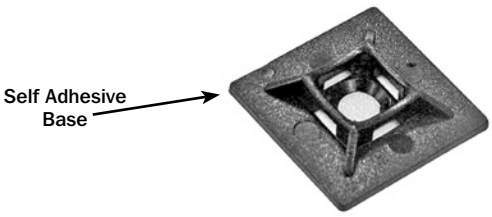

No. CABLHFC2/4BLK 28 x 28mm
wgt. 0.17kg/pack 100

- Entry: 4 way
- Max Tie width: 5.0mm

Cable Ties
Non-Releasable

One piece moulded 'smooth' rounded edge nylon complete with bent finger grip and low threading force for quick installation

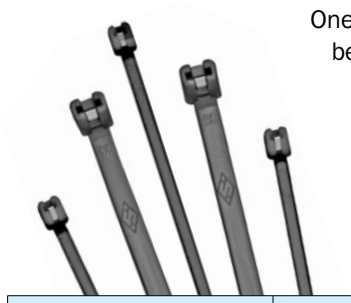

Part No.	Length (mm)	Width (mm)	Quantity per pack	Colour	Weight per pack (kg)
CABLHFC100/BLK	100	2.50	100	Black	0.03
CABLHFC140/BLK	140	3.60	100	Black	0.07
CABLHFC160/BLK	160	4.80	100	Black	0.11
CABLHFC200/BLK	200	4.80	100	Black	0.15
CABLHFC240H/BLK	240	7.60	100	Black	0.40
CABLHFC300/BLK	300	4.80	100	Black	0.22
CABLHFC365/BLK	365	4.80	100	Black	0.26
CABLHFC370H/BLK	370	7.60	100	Black	0.54
CABLHFC530H/BLK	530	9.00	100	Black	1.04
CABLHFC710H/BLK	710	9.00	100	Black	1.34

- Material: High quality virgin Nylon 6.6
- Flame Resistance: in accordance with UL94V2
- Strength: Tensile Strength MIL 23190 E
- Temperature Range: -40°C to +85°C

Cable Ties
Releasable

No. CABLDE863220/S
wgt. 0.12kg (per 50)

- L300 x W6mm
- Black
- Material: Polyamide 6.6 heat stabilised
- Flame resistance: In accordance with UL94V2
- 50 per pack
- Minimum tensile strength: 135N
- Temperature Range: -40°C to +105°C

The ties have serrations on both sides of the strap allowing for quick and easy installation, even where the access or visibility is poor. Prior to final tensioning these ties can be used as 'releasable' ties for the addition of extra cables. Once the cable runs are complete the final tensioning locks the tie in place.
Using a single hole these 'chassis ties' are widely used in the automotive, truck and heavy equipment markets.
Ideal for applications which have access to both sides of the hole – for example – truck frames

ELECTRICAL – CABLE/SUZY/TAPE

Suzy Cable
3 & 5 Core

No. CABL3/075/500 3 Core
wgt. 0.27kg
L500 x Ø27mm closed coil

- 60 Coils
- 2 x 100mm Tails

No. CABL5/075/470 5 Core
wgt. 0.28kg
L470 x Ø23mm closed coil

- 60 Coils
- 2 x 250mm Tails

PVC Insulation Tape
Self Adhesive

No. CABLTAPE/BLACK Black
No. CABLTAPE/RED Red
No. CABLTAPE/YELLOW Yellow
wgt. 0.08kg/roll

- L20mtr x W19mm
- 0.15mm Thick
- Flame retardant, BS EN60454-2

Spiral Binding

A quick and neat way of protecting wiring looms and harnesses against abrasion.
Once fitted it can be constantly adjusted or re-used

Part No.	Overall Diameter (mm)	Length (mtr)
CABLSB2/64/25	6.4	25
CABLSB3/127/25	12.7	25

- Material: Polythene
- Colour: Black
- Continuous operating temperature: -60°C to +85°C

Self Amalgamating Tape

A strong self amalgamating polyisobutylene elastic tape which when wrapped onto itself will create a watertight seal.
Used on cable joints, connections etc.

No. CABL2501/1B Black
No. CABL2501/1W White
wgt. 0.14kg/roll

- L10m x W25mm
- Continuous operating temperature: -40°C to +90°C
- Thickness: 0.5mm

Welwyn Garden City tel +44 (0)1707 371161 fax +44 (0)1707 372603
Coseley tel +44 (0)121 520 0100 fax +44 (0)121 522 3889
website www.cbf.uk.com e-mail: sales@cbf.uk.com

ELECTRICAL – CONDUIT CORRUGATED

Corrugated Conduit PPBS
Flame Retardant Polypropylene

A flexible conduit manufactured from PPBS material, suitable for harness protection on a variety of vehicle applications, but specifically the vehicle interior, chassis and body sections

Technical Specification

- Profile: Normal & AHW (High Wave)
- Colour: Black
- Material: Flame Retardant Polypropylene
- Temperature Range: -40°C to +125°C
- Maximum Temperature: 500 hours at +135°C and 240 hours at +150°C
- Burning Behaviour: According to FMVSS 302, self extinguishing type B
- UV Resistance: According to DIN EN ISO 8580
- Other Features: Flame retardant, high cold impact strength and highly flexible

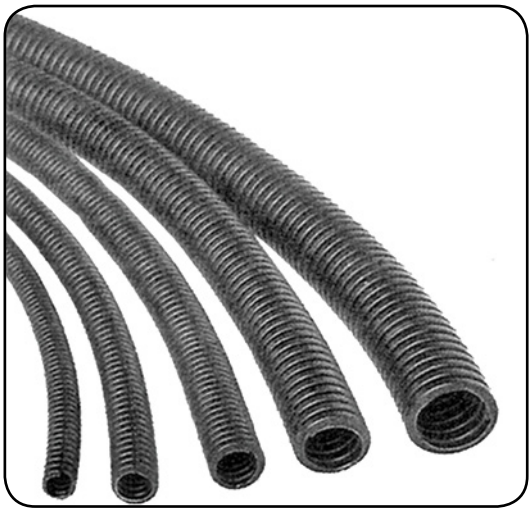

UN-SLIT ROLLS					
Part No.	O/D (mm)	I/D (mm)	Minimum Bending Radius (mm)	Length (mtr)	Weight per roll (kg)
CABL/FCT710	9.9	6.9	15	50	0.62
CABL/FCT1013	12.7	10.1	18	50	0.94
CABL/FCT1115	15.6	12.0	20	50	1.10
CABL/FCT1317	15.8	12.9	22	50	1.12
CABL/FCT1621	21.0	16.8	30	50	1.55

SLIT ROLLS					
Part No.	O/D (mm)	I/D (mm)	Minimum Bending Radius (mm)	Length (mtr)	Weight per roll (kg)
CABL/FCTS710	9.9	6.9	15	50	0.62
CABL/FCTS1115	15.6	12.0	20	50	1.10
CABL/FCTS1317	15.8	12.9	22	50	1.12
CABL/FCTS1418	18.3	14.5	25	50	1.35
CABL/FCTS1621	21.0	16.8	30	50	1.55
CABL/FCTS23	28.0	23.7	42	50	2.50

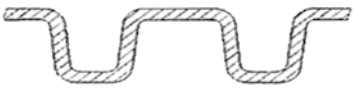

Normal Wave Profile

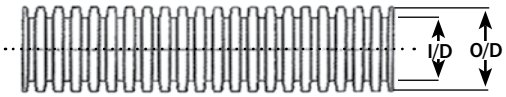

ELECTRICAL – CONNECTORS/HEAT SHRINK

Superseal Connectors
1.5mm Range

Superseal connectors are compact high quality connectors designed for automotive and marine applications where a waterproof joint is required (Waterproof to IP67)
The 1.5mm range of connectors are suitable for cable sizes 0.5mm² to 1.5mm²

- Supplied in kit form comprising: Housing, Terminals & Seals
- 5 & 6 way connectors available to order

No. CABLSS1M
1 way Male

No. CABLSS1F
1 way Female

No. CABLSS2M
2 way Male

No. CABLSS2F
2 way Female

No. CABLSS3M
3 way Male

No. CABLSS3F
3 way Female

No. CABLSS4M
4 way Male

No. CABLSS4F
4 way Female

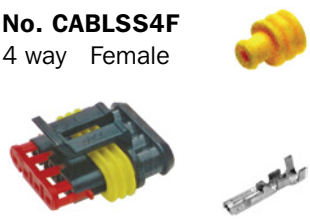

Heat Shrink Sleeving
General Purpose

Commercial grade flexible polyolefin heat shrink sleeving suitable for a wide range of applications which include colour coding, insulating, marking, bundling of wires and protection against abrasion.

Heat Shrinking Sleeving (General Purpose)						
Part No.	**Inside dia. before heating (mm)**	**Inside dia. after heating (mm)**	**Wall thickness after heating (mm)**	**Colour**	**Length (mm)**	**Qty per Bag**
CABLHR6/64/15	6.4	3.2	0.6	Black	150	15
CABLHR7/95/15	9.5	4.8	0.6	Black	150	15
CABLHR8/127/10	12.7	6.4	0.6	Black	150	10

- Continuous operating temperature -40°C to +135°C
- Shrink temperature 120°C
- Supplied in 'economical' packs
- Flame retardant to UL224
- Shrink ratio 2:1
- Other sizes available to order

Heat Shrink Sleeving
Adhesive Lined

Flexible polyethylene heat shrink sleeving with an adhesive lining. Designed to provide a permanent encapsulation for protection against moisture in a wide variety of applications once heated.

Heat Shrinking Sleeving (General Purpose)					
Part No.	**Inside dia. before heating (mm)**	**Insie dia. after heating (mm)**	**Wall thickness after heating (mm)**	**Colour**	**Lengths available (mm)**
CABLHA3/60/1	6.0	2.0	1.2	Black	1220
CABLHA4/90/1	9.0	3.0	1.4	Black	1220
CABLHA5/120/1	12.0	4.0	1.7	Black	1220

- Continuous operating temperature -55°C to +85°C
- Shrink temperature +95°C to +200°C
- Sold singly
- Self extinguishing
- Shrink ratio 3:1
- Other sizes available to order

Welwyn Garden City tel +44 (0)1707 371161 fax +44 (0)1707 372603
Coseley tel +44 (0)121 520 0100 fax +44 (0)121 522 3889
website www.cbf.uk.com e-mail: sales@cbf.uk.com

ELECTRICAL – CONNECTORS/TERMINALS

Pre-Insulated Crimp Terminals

A complete range of pre-insulated terminals that combine high quality with competitive pricing

- High grade PVC insulation makes crimping easy whilst ensuring complete integrity of termination
- VR indicates 'Vibration Resistant' – extra copper ring within the crimp terminal
- Red Insulation: Conductor size 0.5-1.5mm2 / 22-16awg
- Blue Insulation: Conductor size 1.5-2.5mm2 / 16-14awg

Ring Terminals			
Part No.	Stud Size (mm)	Insulation colour	Pack size
CABLBR32	3.0	Blue	100
CABLRR32	3.0	Red	100
CABLBR37	3.5	Blue	100
CABLRR37	3.5	Red	100
CABLBR43	4.0	Blue	100
CABLRR43	4.0	Red	100
CABLBR53	5.0	Blue	100
CABLRR53	5.0	Red	100
CABLBR64	6.0	Blue	100
CABLRR64	6.0	Red	100
CABLBR84	8.0	Blue	100
CABLRR84	8.0	Red	100

Spade (fork) Terminals			
Part No.	Stud Size (mm)	Insulation colour	Pack size
CABLBS32	3.0	Blue	100
CABLRS32	3.0	Red	100
CABLBS37	3.5	Blue	100
CABLRS37	3.5	Red	100
CABLBS43	4.0	Blue	100
CABLRS43	4.0	Red	100
CABLBS53	5.0	Blue	100
CABLRS53	5.0	Red	100
CABLBS64	6.0	Blue	100
CABLRS64	6.0	Red	100

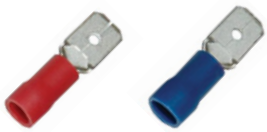

Male Tabs / Vibration Resistant				
Part No.	Stud Size (mm)	Tab Thickness (mm)	Insulation colour	Pack size
CABLBM50/VR	4.8	0.8	Blue	100
CABLRM50/VR	4.8	0.8	Red	100
CABLBM63/VR	6.3	0.8	Blue	100
CABLRM63/VR	6.3	0.8	Red	100

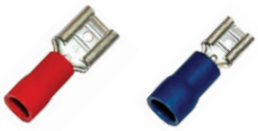

Female Push-ons / Vibration Resistant				
Part No.	Male Tab Size (mm)	Male Tab Thickness (mm)	Insulation colour	Pack size
CABLBF50/08/VR	4.8	0.8	Blue	100
CABLRF50/08/VR	4.8	0.8	Red	100
CABLBF66/08/VR	6.3	0.8	Blue	100
CABLRF66/08/VR	6.3	0.8	Red	100

Male Piggy Backs / Vibration Resistant				
Part No.	Stud Size (mm)	Tab Thickness (mm)	Insulation colour	Pack size
CABLBPB63/VR	6.3	0.8	Blue	100
CABLRPB63/VR	6.3	0.8	Red	100

Female Push-ons / Fully Insulated / Vibration Resistant				
Part No.	Male Tab Size (mm)	Male Tab Thickness (mm)	Insulation colour	Pack size
CABLBF50/FI/VR	4.8	0.8	Blue	100
CABLRF50/FI/VR	4.8	0.8	Red	100
CABLBF66/FI/VR	6.3	0.8	Blue	100
CABLRF66/FI/VR	6.3	0.8	Red	100

ELECTRICAL – CONNECTORS/TERMINALS

Male Bullets / Vibration Resistant			
Part No.	Bullet dia. (mm)	Insulation colour	Pack size
CABLRMB40/VR	4.0	Red	100
CABLBMB50/VR	5.0	Blue	100

Female Bullets / Fully Insulated / Vibration Resistant			
Part No.	Male Bullet dia. (mm)	Insulation colour	Pack size
CABLRFB40/VR	4.0	Red	100
CABLBFB50/VR	5.0	Blue	100

Pin Terminals				
Part No.	Male Bullet dia. (mm)	Pin Length (mm)	Insulation colour	Pack size
CABLRP10	4.0	10.0	Red	100
CABLBP10	4.5	10.0	Blue	100

Butt Connectors / Fully Insulated				
Part No.	Male Bullet dia. (mm)	Pin Length (mm)	Insulation colour	Pack size
CABLRBC4	4.0	10.0	Red	100
CABLBBC45	4.5	10.0	Blue	100

Copper Tube Terminals

All terminals feature an inspection hole. Suitable for crimping or soldering.
Manufactured from tinned copper

- 100 terminals per pack
- Other sizes available upon request

Part No.	Suitable for cables mm²	Cable Entry (C) mm	Stud Hole Size (S) mm	Length (L) mm	Width (W) mm	wgt. per pack kg
CABLCTT16/6	16	5.5	6	30.0	10.8	0.49
CABLCTT16/8			8	30.0	13.5	0.62
CABLCTT25/6	25	7.0	6	32.5	13.8	0.69
CABLCTT25/8			8	32.5	13.8	0.81

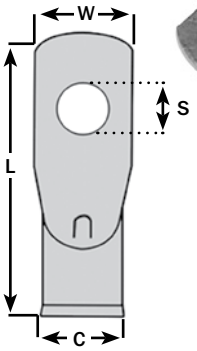

Heat Shrink Butt Connectors

No. CABLHT207/RED Red
wgt. 0.11kg/pack 100

- To suit cables 0.5mm² – 1.5mm²
- 16/0.20-21/0.30mm

No. CABLHT208/BLUE Blue
wgt. 0.13kg/pack 100

- To suit cables 1.5mm² – 2.5mm²
- 21/0.30-35/0.30mm

No. CABLHT209/YELL Yellow
wgt. 0.22kg/pack 100

- To suit cables 3.0mm² – 6.0mm²
- 44/0.30-34/0.30mm

The stripped wire is inserted into the metal barrel and crimped. The terminal sleeve is heated with a hot air gun until it reduces in size and the adhesive flows, filling voids within the terminal.

Welwyn Garden City tel +44 (0)1707 371161 fax +44 (0)1707 372603
Coseley tel +44 (0)121 520 0100 fax +44 (0)121 522 3889
website www.cbf.uk.com e-mail: sales@cbf.uk.com

ELECTRICAL – FUSES/CABLE CLIPS

Mega Fuses

Part No.	Rating (Amps)	Colour
CABLMF100/10	100	Yellow
CABLMF125/10	125	Green
CABLMF150/10	150	Orange
CABLMF175/10	175	White
CABLMF200/10	200	Blue
CABLMF225/10	225	Light Brown
CABLMF250/10	250	Pink
CABLMF300/10	300	Grey
CABLMF500/10	500	Brown

Sold in packs of 10

Mega Fuse Holder

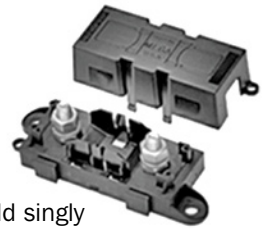

No. CABLFH569/1
wgt. 0.09kg

Sold singly

Individual fuse holder accepts mega fuses. The cable connections are made using the 2 protruding 8mm studs. The fuse holder is fixed onto a firm surface using fixing points located at the ends of the unit. Multiple fuse holders can be clipped together to form a block.

Blade Fuse Holder

No. CABLFH445
wgt. 0.02kg/10
Max. 30 amp

Sold singly

- Fitted with a lid to prevent water ingress

Dashboard Sounder

No. LTMS562/62/12 12 volt

No. LTMS562/74/24 24 volt

wgt. 0.02kg

- Two terminal
- Single hole fixing
- Two tone
- 72dB
- Not suitable for exterior use

Chassis Cable & Pipe Clips

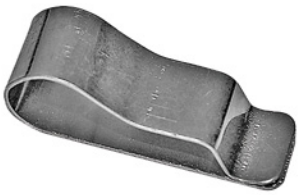

No. CABL87187
wgt. 5.00kg/pack 1000

- Grips Ø6mm cable
- Material: Carbon spring steel
- Zinc plated

Chassis Cable & Pipe Clips

No. CABL87185
wgt. 5.00kg/pack 1000

- Grips Ø8mm cable
- Material: Carbon spring steel
- Zinc plated

Cable & Pipe Clips

No. CABLH4P
wgt. 0.48kg/pack 1000

- Grips Ø8mm cable
- Material: Black nylon 6

Cable Clips
Self Adhesive

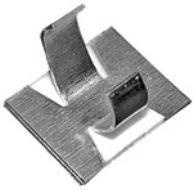

No. CABLKR103
wgt. 0.72kg/pack 1000
Base: 19 x 16mm

- Grips Ø4-8mm cable
- Material: Aluminium

Cable Clips

No. CABL1011/BLK
wgt. 3.00kg/pack 1000

- Grips Ø10-11mm cable
- Suits 4-7mm steel
- Material: Carbon spring steel
- Black painted

ELECTRICAL – JUNCTION BOXES/SWITCHES

Junction Box
8 way

No. LTMS/CB8/01
wgt: 0.30kg
Housing: W114 x H95 x D40mm

- 4 cable entries can be cut to size to accept various cable thicknesses
- Single height
- Rubber housing
- Transparent cover

Junction Box
8 way Mapped Circuitry

No. LTMS120/01/02
wgt: 0.34kg
Housing: W146 x H98 x D63mm

- Single height
- Plastic housing
- Solid cover
- Spade terminals
- Pre-formed grommets accept 2 core flat and round 4, 5, 7 & 10 core cables

Weatherproof
Square Box

No. LTMS0921/36
wgt: 0.14kg
Housing: W105 x H105 x D55mm

- Grey plastic housing
- IP55 rated
- 7 membrane glands

LED Blade Fuse Boxes

Consists of 1 x 5mm positive power input stud which feeds each of the blade fuses. Each fuse has a 6.3mm male blade terminal and a red LED indicator light next to it that glows when the fuse has blown.

- Transparent cover
- LED indicator
- Live terminal – connector must be insulated

Part No.	No. of fuses	Male blade	Size W x H x D	Wgt (kg)
LTMSFBB4L	4	4 x 6.3mm	45 x 35 x 85	0.006
LTMSFBB6L	6	6 x 6.3mm	65 x 35 x 85	0.008
LTMSFBB10L	10	10 x 6.3mm	95 x 35 x 85	0.100

Welwyn Garden City tel +44 (0)1707 371161 fax +44 (0)1707 372603
Coseley tel +44 (0)121 520 0100 fax +44 (0)121 522 3889
website www.cbf.uk.com e-mail: sales@cbf.uk.com

ELECTRICAL – JUNCTION BOXES/SWITCHES

Push/Pull Switch
On/Off

No. 6ED004778001 12 volt
wgt. 0.03kg

- Supplied with red, green & orange illumination inserts
- 14.5mm panel hole required
- Max load 8 amps/12volt

Two-way Switch
IP55 Rated

No. LTMS/GW27833
wgt. 0.12kg
Size: W66 x H82 x D65mm

- Grey plastic
- IP55 rated
- 1 x membrane gland

Rocker Switch
On/Off LED

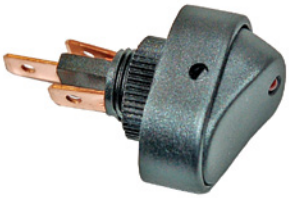

No. LTMS133/12
12volt / 30amp
No. LTMS133/24
24volt / 25amp
wgt. 0.01kg

- Red LED Indicator
- Single Pole Switch
- Suits 4mm panel thickness with Ø12.2mm hole

Rocker Switch
On/Off LED

No. LTMS053105
12/24volt / 10amp
wgt. 0.01kg

- Red LED Indicator
- Single Pole Switch
- Snap fits into Ø20mm panel hole

Recessed Panic Button
Emergency Stop Switch

Rear View

No. LTMS9/01463
wgt. 0.07kg
Size: W125 x H125 x D43mm

- Stainless steel Pan, Gasket & Contact Block
- Allows an engine or power supply to be shut down immediately
- Highly visible 'punch' button
- Switch is tested for make & break to 6 amps at 415V
- Suitable for 12-240 volts AC/DC with thermal current rating of 10 amps

2 Button Control Box

MAFELEC

No. CABL8/1001/S
wgt.0.13kg
W110 x H62 x D54mm

- **'Genuine'** Mafelec product
- Two-way – 'up' & 'down'
- Yellow and grey plastic

ELECTRICAL – JUNCTION BOXES/SWITCHES

Battery Master Switch

No. CABL/BIS-1
wgt. 0.11kg
100 amps

- Max rating 500 amps for 5 secs.
- Removable key
- Weatherproof seals
- 2 x M10 Studs

Battery Connector

No. CABL6325G1/GREY
wgt. 0.11kg
175 amp Grey connector complete with 2 tips

- Single piece housing of impact resistant polycarbonate
- Silver plated solid copper contacts
- Integral stainless steel leaf springs
- Other sizes and specifications available to order

7 Pin Plastic Plug

No. 8JA001930003 7 Pin plastic plug
wgt: 0.07kg 7 Screw contacts
Max. load: 16A at 12v (lead size 1.5 sq. mm)
25A at 12v (lead size 2.5 sq. mm)

7 Pin Plastic Socket & Rubber Gasket Cover

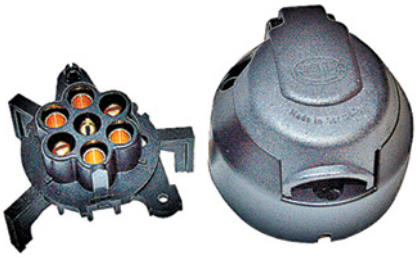

Plastic socket

Gasket cover

No. 8JB001943003 7 Pin plastic socket
wgt: 0.08kg 7 Screw contacts
Max. load: 16A at 12v (lead size 1.5 sq. mm)
25A at 12v (lead size 2.5 sq. mm)

- Sprung loaded lid

No. 9GD735641001 Rubber Gasket Cover
wgt: 0.02kg to suit 7 pin Socket

Limit Switch

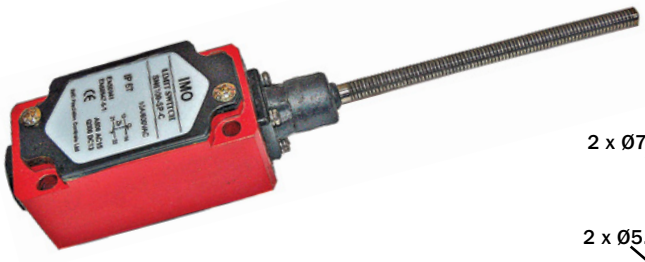

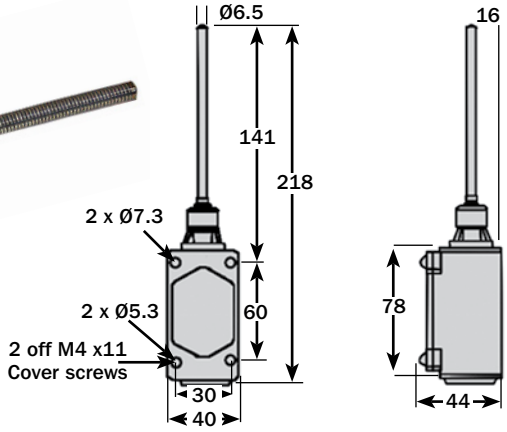

No. CABL/D4BSN6100
wgt. 0.39kg

- Aluminium body
- Snap or slow action
- Cable entry M20
- IP67 Protection
- Full specification available upon request

Welwyn Garden City tel +44 (0)1707 371161 fax +44 (0)1707 372603
Coseley tel +44 (0)121 520 0100 fax +44 (0)121 522 3889
website www.cbf.uk.com e-mail: sales@cbf.uk.com

ELECTRICAL – LIGHTS/BULBS

BULB

Bulbs

SCC
Small Centre Contact
SBC
Small Bayonet Cap
MCC
Miniature Centre Contact

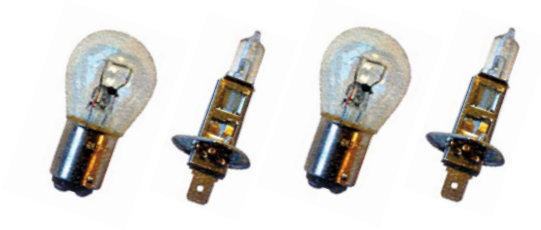

- All bulbs are sold in box quantity
- Other styles of bulbs are available, contact your local sales office for more information

Stop/Tail/Indicator

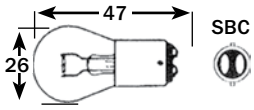

No. BULB335 12v x 21w
No. BULB346 24v x 21w
- 10 per box

Stop/Tail/Indicator

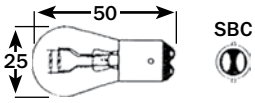

No. BULB380 12v x 21/5w
- 10 per box

Stop/Tail/Indicator

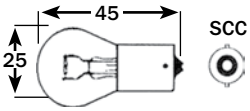

No. BULB382 12v x 21w
No. BULB241 24v x 21w
- 10 per box

Sidelight

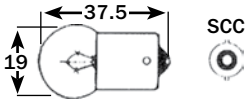

No. BULB149 24v x 5w
- 10 per box

Sidelight

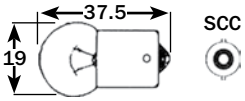

No. BULB207 12v x 5w
- 10 per box

Sidelight

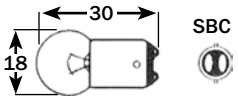

No. BULB209 12v x 5w
- 10 per box

Sidelight

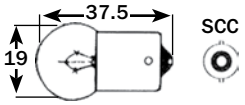

No. BULB245 12v x 10w
- 10 per box

Sidelight

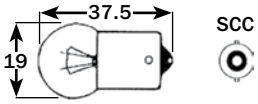

No. BULB248 24v x 5w Heavy Duty
- 10 per box

Sidelight

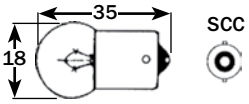

No. BULB874 28v x 7w
- 10 per box

Sidelight

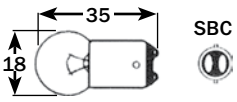

No. BULB875 28v x 7w
- 10 per box

Halogen Headlight

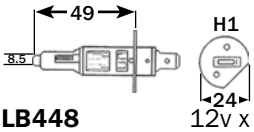

No. BULB448 12v x 55w
No. BULB466 24v x 70w
- Sold singly

Halogen Headlight

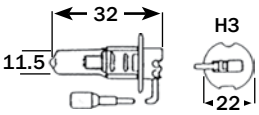

No. BULB453 12v x 55w
No. BULB460 24v x 70w
- Sold singly

Halogen

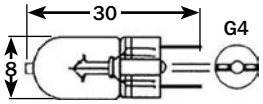

No. BULB64435/U 24v x 20w
- Sold singly

Side/Instrument

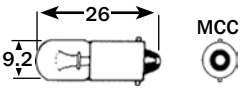

No. BULB233 12v x 4w
No. BULB249 24v x 4w
- 10 per box

Indicator – Amber

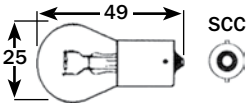

No. BULB588 24v x 21w
- 10 per box

Festoon

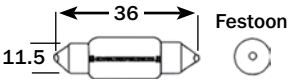

No. BULB239 12v x 5w
- 10 per box

Festoon

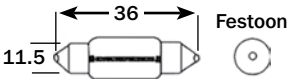

No. BULB242 24v x 5w
- 10 per box

Capless Base

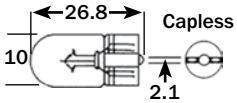

No. BULB501 12v x 5w
No. BULB507 24v x 5w
- 10 per box

ELECTRICAL – LIGHTS/FLUORESCENT

Slimline PIR Sensor
30 Second Timer

No. LTMSTST10/5PIR/12 12v 30 Second timer
wgt. 0.12kg Size: L119 x W44 x D19mm

- Detects the movement of body heat in order to activate the sensor
- Once the sensor has been triggered the timer will automatically switch the connected device on, until no movement is detected, a 30 second timer will then start
- Low energy consumption
- Ultra-Slim profile
- Temperature range: -30°C to +40°C

Master PIR Sensor
5 Minute Timer

No. LTMSTSWP5PIR/12 12v 5 Minute timer

No. LTMSTSWP5PIR/2/24 24v
wgt. 0.22kg Size: L140 x W100 x D20mm

- Detects the movement of body heat in order to activate the sensor
- Once the sensor has been triggered the timer will automatically switch the connected device on, until no movement is detected, a 5 minute timer will then start
- Low energy consumption
- Slim profile
- Temperature range: -30°C to +40°C

BULB

Cargo Light (BLC Range)
Surface Mounting

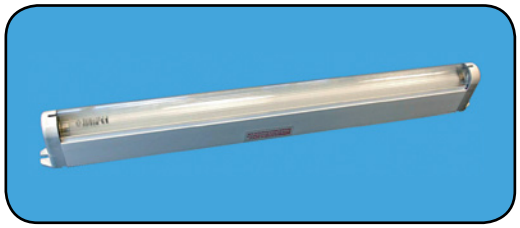

No. LTFLBLC13/12 12v x 13w 800 lumens 1 Tube
No. LTFLBLC13/24 24v x 13w 800 lumens 1 Tube
wgt. 0.44kg Size: L573 x W35 x H70mm

- Designed for corner installation
  Captures normally wasted light and reflects it forward
- Tough construction – Aluminium chassis/Polycarbonate lens
- High light output
- Low energy consumption
- Temperature range: -10°C to +40°C
- Un-switched

*Replacement tube available, see page 75

800 LUMENS

BULB

Batten Light (BL Range)
Surface Mounting

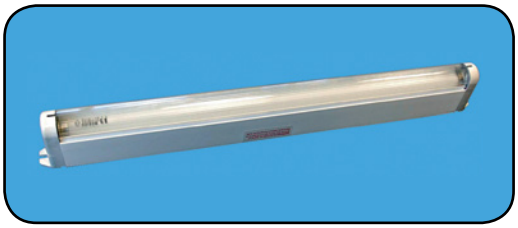

No. LTFLBL13/24 24v x 13w 800 lumens 1 Tube
wgt. 0.44kg Size: L573 x W35 x H49mm

- High light output
- Un-switched
- Low energy consumption
- Aluminium chassis
- Temperature range: -10°C to +40°C

*Replacement tube available, see page 75

800 LUMENS

Welwyn Garden City tel +44 (0)1707 371161 fax +44 (0)1707 372603
Coseley tel +44 (0)121 520 0100 fax +44 (0)121 522 3889
website www.cbf.uk.com e-mail: sales@cbf.uk.com

ELECTRICAL – LIGHTS/FLUORSECENT

BULB

Tri-Lite (KL Range)
Surface Mounting

No. LTFLKL8/12 12v x 8w 350 lumens 1 Tube
wgt. 0.18kg Size: L381 x W78 x H24mm

No. LTFLKL16/12 12v x 16w 600 lumens 2 Tubes

No. LTFLKL16/24 24v x 16w 600 lumens 2 Tubes
wgt. 0.31kg Size: L381 x W78 x H24mm

No. LTFLKL24/12 12v x 24w 800 lumens 3 Tubes
wgt. 0.34kg Size: L381 x W78 x H24mm

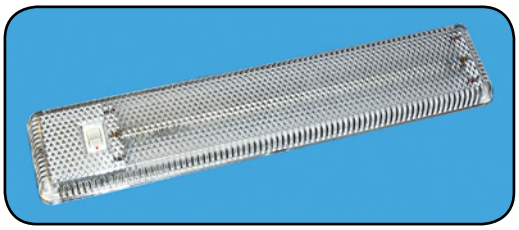

*Replacement tube available, see below

- Integrated switch
- Temperature range: -10°C to +40°C
- Low profile – 24mm
- Low energy consumption

600 LUMENS
350 LUMENS
800 LUMENS

BULB

Polaris (HL & XT Range) – *Suitable for chilled use*
Recessed Fitment

No. LTFLHL11/XT24 24v x 11w 890 lumens 1 Tube
wgt. 0.66kg Size: L376 x W100 x 6.5mm *protrusion*
Recessed cut-out: L338 x W83 x D40mm

No. LTFLHL18/24 24v x 14w 1350 lumens 1 Tube
wgt. 1.32kg Size: L715 x W100 x 6.5mm *protrusion*
Recessed cut-out: L677 x W83 x D40mm

*Replacement tube available, see below

- IP66 Rated
- High light output
- Temperature range: -10°C to +40°C
- Tough polycarbonate enclosure

890 LUMENS
1350 LUMENS

BULB

Frigo Spot (HLCF Range) – *Suitable for refrigeration use*
Recessed Fitment

No. LTFLHLCF11/12 12v x 11w 890 lumens 1 Tube

No. LTFLHLCF11/24 24v x 11w 890 lumens 1 Tube
wgt. 0.54kg Overall dia. 169mm x 10mm protrusion
Recess cut-out: Ø108 x D36mm

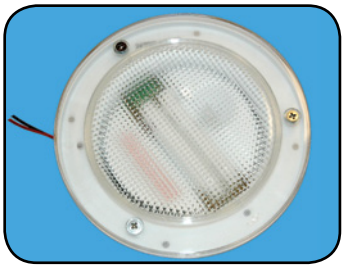

*Replacement tube available, see below

- IP66 rated
- Reduces battery drain
- Temperature range: -30°C to +40°C
- High light output
- Unbreakable polycarbonate lens

At cold temperatures halogen lighting is used (indicated by a small LED within the unit) to combat condensation fog, but as the temperature inside the unit rises it switches to purely fluorescent operation, thus providing a brighter more even distribution of light and requiring much less power.

890 LUMENS

Replacement Tubes / Bulbs

Part No.	Replacement Tube	Replacement Bulb
LTFLBLC13/12	TUBE13/WHITE	N/A
LTFLBLC13/24	TUBE13/WHITE	N/A
LTFLBL13/24	TUBE13/WHITE	N/A
LTFLKL8/12	TUBE8/WHITE	N/A
LTFLKL16/12	TUBE8/WHITE	N/A
LTFLKL16/24	TUBE8/WHITE	N/A

Part No.	Replacement Tube	Replacement Bulb
LTFLKL24/12	TUBE8/WHITE	N/A
LTFLHL11/XT24	TUBE11/WHITE	N/A
LTFLHL18/24	TUBE14/549WHITE	N/A
LTFLHLCF11/12	TUBE3/WHITE	BULB64435/U
LTFLHLCF11/24	TUBE3/WHITE	BULB64435/U

ELECTRICAL – LIGHTS/LED

LED

Oval Interior Light
Surface Mounted

No. LTRF22767/DV 12/24v 300 lumens
wgt. 0.18kg Size: L235 x W125 x D13mm

- IP67 Rated
- Ultra slim design
- Un-switched
- Multi-voltage
- 3 Year warranty
- Frosted polycarbonate lens
- Temperature range: -30°C to +50°C
- White plastic surround
- 90mm Fly lead

300 LUMENS maxi-lux EMC APPROVED

LED

Round Interior Light
Surface Mounted

No. LTRF22758/DV 12/24v 420 lumens
wgt. 0.18kg Size: Ø155 x D16mm

- Clear polycarbonate lens
- 21 x LED's

No. LTRF22777/DV 12/24v 1050 lumens
wgt. 0.18kg Size: Ø155 x D16mm

- Frosted polycarbonate lens
- 21 x 'Superbright' LED's

No. LTRF22777/PIR/DV 12/24v 790 lumens
wgt. 0.19kg Size: Ø155 x D27mm

- Complete with PIR sensor, Detects the movement of body heat to activate a 5 minute timer
- Frosted polycarbonate lens
- 17 x 'Superbright' LED's

No. LTRF22781/DV 12/24v 1950 lumens
wgt. 0.24kg Size: Ø180 x D16mm

- Frosted polycarbonate lens
- 39 x 'Superbright' LED's

Clear lens

Frosted lens

LTRF22758/RB

General Details
- 3 Year warranty
- IP67 Rated
- 180mm Fly lead
- Un-switched
- Multi-voltage
- EMC Approved
- Ultra slim design
- Temperature range: -30°C to +50°C
- White plastic surround

No. LTRF22758/RB Recessed bezel only
wgt. 0.13kg
- Converts **LTRF22758/DV, LTRF22777/DV** & **LTRF22777/PIR/DV** into a recessed mounted unit

420 LUMENS
1050 LUMENS
790 LUMENS
1950 LUMENS
maxi-lux EMC APPROVED

LED

Rectangular Interior Light
Surface & Recess Mounted

No. LTRF22766/DV 12/24v 1200 lumens
wgt. 0.94kg Size: L485 x W170 x 22mm *protrusion*
- Surface mounted

No. LTRF22764/DV 12/24v 1200 lumens
wgt. 0.94kg Size: L485 x W150 x 11.3mm *protrusion*
- Recessed mounted

- IP67 Rated
- White plastic surround
- Un-switched
- Multi-voltage
- 3 Year warranty
- 420mm Fly lead
- EMC Approved
- Clear lens
- Temperature range: -30°C to +50°C

1200 LUMENS maxi-lux EMC APPROVED

Welwyn Garden City tel +44 (0)1707 371161 fax +44 (0)1707 372603
Coseley tel +44 (0)121 520 0100 fax +44 (0)121 522 3889
website www.cbf.uk.com e-mail: sales@cbf.uk.com

ELECTRICAL – LIGHTS/LED

LED

Awning Light
Surface Mounted

No. LTMS22763/DV 12-24v 520 lumens
wgt. 0.23kg Size: L456 x W53 x D33mm

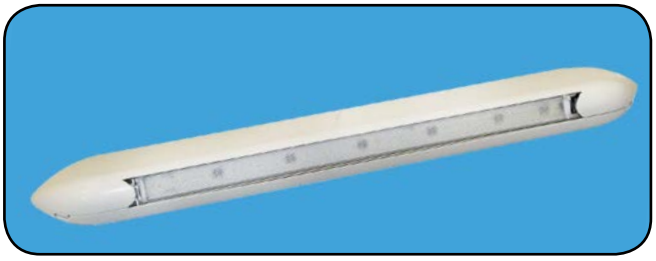

- 18 Brilliant white LED's
- Angled housing for efficient light distribution
- Frosted lens / White housing
- Water/Dust/Shock resistant
- Multi-voltage
- Un-switched
- IP67 Rated
- Temperature range: -30°C to +50°C
- 3 Year warranty

520 LUMENS maxi-lux EMC APPROVED

LED

'GIANNA' Interior Light
Surface Mounted

No. LTMS22776/DV 12/24v 520 lumens Un-switched
wgt. 0.10kg Size: L400 x W25 x D15.5mm

No. LTMS22776/DVSW 12/24v 520 lumens Integrated switch
wgt. 0.10kg Size: L400 x W25 x D15.5mm

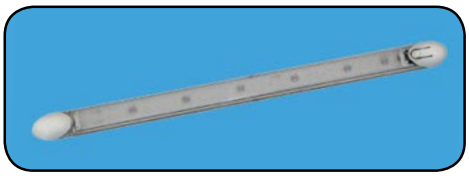

Integrated switch option

- IP67 Rated
- EMC Approved
- Frosted lens
- Superior output
- Multi-voltage
- 3 Year warranty
- 100mm Fly lead
- Temperature range: -30°C to +50°C
- 18 x 'Superbright' SMD LED's
- Robust design

520 LUMENS maxi-lux EMC APPROVED

LED

'ROSA' Interior Light
Surface Mounted

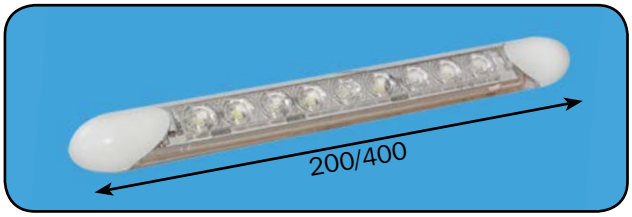

Integrated switch option

MINI RANGE

No. LTMS76728/MINI/12	12v	110 lumens	Un-switched
No. LTMS76728/MINI/12SW	12v	110 lumens	Integrated switch
No. LTMS76728/MINI/24	24v	110 lumens	Un-switched
No. LTMS76728/MINI/24SW	24v	110 lumens	Integrated switch

wgt. 0.05kg Size: L200 x W25 x D15.5mm

- 9 Brilliant White LED's
- 3 Year warranty

STANDARD RANGE

No. LTMS76728/12	12v	220 lumens	Un-switched
No. LTMS76728/12SW	12v	220 lumens	Integrated switch
No. LTMS76728/24	24v	220 lumens	Un-switched
No. LTMS76728/24SW	24v	220 lumens	Integrated switch

wgt. 0.10kg Size: L400 x W25 x D15.5mm

- 18 Brilliant White LED's
- 3 Year warranty

- Low power consumption
- Current draw: 1.5A at 13.5v to 0.73A at 28v
- Clear lens
- Robust housing
- IP67 Rated
- Water/Dust/Shock resistant
- Temperature range: -30°C to +50°C
- 100mm Fly lead

110 LUMENS
220 LUMENS maxi-lux EMC APPROVED

ELECTRICAL – LIGHTS/LED

LED

Megalux (PDI)
Surface Mounted

No. LTRFPDI/43/DV 10-32v 850 lumens
wgt. 0.15kg Size: Ø132 x D13.5mm

- Low profile design
- Low energy consumption – 80% less than halogen
- 90,000 hours life – **CREE** LED's
- IP66 Rated
- Cast aluminium base
- Temperature range: -25°C to +40°C
- 488 Lumen (budget) version available upon request

850 LUMENS Labcraft EMC APPROVED

LED

Scenelite (SI6)
Surface Mounted

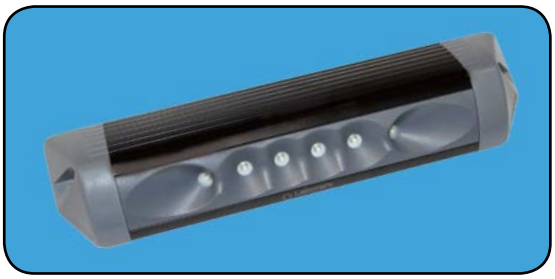

No. LTMSSI6/63/DV 10-32v 1050 lumens
wgt. 0.45kg Size: L310 x W82 x D38mm

- Low energy consumption – only 18W
- IP68 Rated
- Clean white LED's
- Robust construction
- Temperature range: -20°C to +40°C
- Unique light projection – All six LED's are angled at 40° towards the ground, the outer 2 LED's are tilted at 30° to each side, improving light distribution.

1050 LUMENS Labcraft EMC APPROVED

LED

Scenelite (SI7)
Surface Mounted

No. LTMSSI7/53/DV 10-32v 1068 lumens
wgt. 0.30kg Size: L230 x W62.5 x D36mm

- Unique curved PCB offers great light distribution
- IP67 Rated
- Low energy consumption – only 12.5W
- Robust construction – Solid aluminium casing
- Temperature range: -30°C to +40°C

1068 LUMENS Labcraft EMC APPROVED

Welwyn Garden City tel +44 (0)1707 371161 fax +44 (0)1707 372603
Coseley tel +44 (0)121 520 0100 fax +44 (0)121 522 3889
website www.cbf.uk.com e-mail: sales@cbf.uk.com

ELECTRICAL – LIGHTS/LED

LED

Superlux
Surface Mounted

No. LTMSSI3/23/DV 10-32v 340 lumens
wgt. 0.165kg Size: L128 x W100 x D15mm

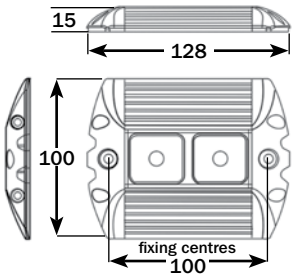

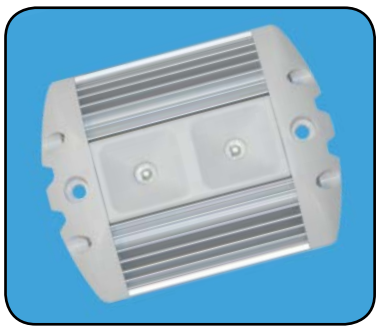

- 2 Brilliant white LED's
- Cast aluminium base
- Water/Dust/Shock resistant
- Multi-voltage
- IP67 Rated
- Ultra slim profile
- Temperature range: -30°C to +40°C

340 LUMENS

LED

Nebula – Striplight
Surface Mounted

No. LTMSSI5CW500/12	12v	192 lumens	Un-switched
No. LTMSSI5CW500/24	24v	192 lumens	Un-switched
No. LTMSSI5CW500/SW12	12v	192 lumens	Integrated switch
No. LTMSSI5CW500/SW24	24v	192 lumens	Integrated switch

wgt. 0.46kg Size: L626 x W44 x D15mm

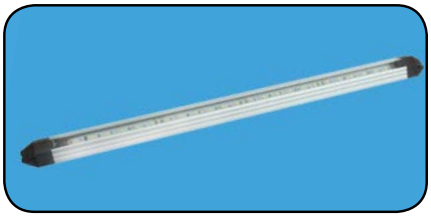

- 24 white LED's
- 400mm Fly lead
- Robust aluminium housing
- IP66 Rated
- Temperature range: -30°C to +40°C
- 1000mm Units available upon request

192 LUMENS

LED

Orizon – Striplight
Surface Mounted

No. LTMSSCW500/PV3/12	12v	288 lumens	24 LED'S
No. LTMSSCW500/PV3/2/24	24v	288 lumens	24 LED'S

wgt. 0.08kg Size: L522 x W18 x D11mm

No. LTMSSCW1000/PV3/12	12v	576 lumens	48 LED'S
No. LTMSSCW1000/PV3/2/24	24v	576 lumens	48 LED'S

wgt. 0.15kg Size: L1020 x W18 x D11mm

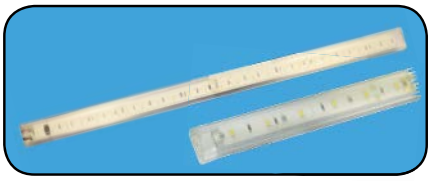

- 24/48 white LED's
- 500mm Fly lead
- IP66 Rated
- Long life high intensity **CREE** LED's
- Temperature range: -30°C to +40°C
- Low power consumption

288 LUMENS
576 LUMENS

LED

Powerlux / Hyperlux
Surface Mounted

Powerlux
No. LTMSSI3/5/1/DV 10-32v 671 lumens

Hyperlux
No. LTMSSI3/5/3/DV 10-32v 1068 lumens
wgt. 0.46kg Size: L298 x W100 x D17mm

- High output **CREE** LED's
- Clean white light
- Low energy consumption
- Multi-voltage
- IP67 Rated
- Temperature range: -30°C to +40°C

671 LUMENS
1068 LUMENS

ELECTRICAL – LIGHTS

BULB

Interior Lamp
Surface Mounted

No. LTRF30115 12-24v Un-switched
No. LTRF30115/SW 12-24v Integrated switch
wgt. 0.29kg Size: L231 x W109 x D40mm

- Stainless steel base
- Frosted plastic lens
- Bulbs to suit (not included): – see page 73
  1 x **No. BULB382** 12v x 21w
  1 x **No. BULB241** 24v x 21w

BULB

Interior Lamp
Surface Mounted

No. LTRF30144 12-24v
wgt. 0.27kg Size: Ø185 x D40mm

- Frosted plastic lens
- White plastic base complete with stainless steel heat shield
- Bulbs to suit (not included): – see page 73
  1 x **No. BULB382** 12v x 21w
  1 x **No. BULB241** 24v x 21w

BULB

Interior Lamp
Recessed Fitment

No. LTRF30144/R 12-24v
wgt. 0.30kg Size: Ø220 x D40mm
Recess cut-out: Ø170 x D35mm

- Frosted plastic lens
- White plastic base complete with stainless steel heat shield
- Bulbs to suit (not included): – see page 73
  1 x **No. BULB382** 12v x 21w
  1 x **No. BULB241** 24v x 21w

BULB

Interior Lamp
Surface Mounted

No. LTRFFXB21/12 12v x 21W 320 lumens
No. LTRFFXB21/24 24v x 21W 320 lumens
wgt. 0.16kg Size: L244 x W123 x D65mm

- Polycarbonate domed lens
- IP65 Rated
- 180mm Fly-lead
- The diffuser is attached to the baseplate with a specially designed lip which forms a weatherproof seal when pushed together
- Bulbs included: – see page 73 for spares
  1 x **No. BULB382** 12v x 21w
  1 x **No. BULB241** 24v x 21w

320 LUMENS

Welwyn Garden City tel +44 (0)1707 371161 fax +44 (0)1707 372603
Coseley tel +44 (0)121 520 0100 fax +44 (0)121 522 3889
website www.cbf.uk.com e-mail: sales@cbf.uk.com

ELECTRICAL – LIGHTS

BULB

Interior Bulb Lamp
Surface Mounted

Britax

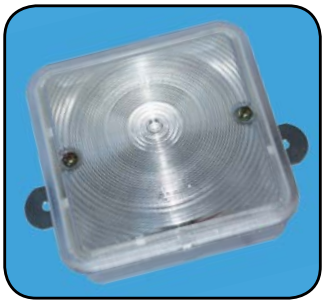

No. LTRF708/100 12-24v
wgt. 0.24kg Size: L118 x W188 x D45mm

- Plastic lens
- White plastic housing
- 300mm Fly-lead
- Un-switched
- Bulbs to suit (not included): – see page 73

1 x **No. BULB335** 12v x 21w
1 x **No. BULB346** 24v x 21w

BULB

Step / Auxiliary Bulb Lamp
Recessed Fitment

Britax

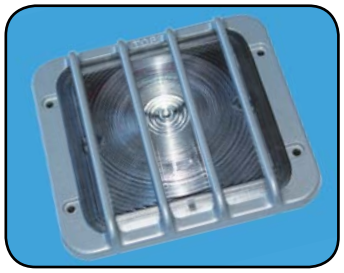

No. LTMS869/00 12-24v
wgt. 0.43kg Size: L148 x W135 x D20mm *protrusion*
Recess cut-out: L112 x W86 x D38mm

- Clear plastic lens
- Rubber housing
- Aluminium lens guard
- Un-switched
- Bulbs to suit (not included): – see page 73

1 x **No. BULB382** 12v x 21w
1 x **No. BULB241** 24v x 21w

LED

LED Cabin / Step Lamp
Recessed Fitment

PEREI LIGHTING

No. LTMSPL360/S01/DV 10-30v Clear only
No. LTMSPL360/S02/DV 10-30v Clear & red ambient (mood illumination)
wgt. 0.02kg Size: L74 x W25 x D23mm

- Clear plastic lens
- IP67 Rated
- 150mm Fly-lead
- Flush design with integrated clip facility
- Superseal connection
- Temperature range: -30°C to +40°C

EMC APPROVED

ELECTRICAL – MARKER LAMPS

LED

LED Front, Rear & Side Marker Lamps
Surface Mounted

CYLON SERIES

No. LTMS316801050/DV 10-30v Front Clear
No. LTMS316801052/DV 10-30v Rear Red
No. LTMS316801051/DV 10-30v Side Amber
wgt. 0.04kg Size: L59 x W36 x D27mm

- Multi-voltage
- IP68 Rated
- 500mm Fly-lead
- Cylon LED unit

LED

LED Side Marker Lamp
Pendant Bracket

CYLON SERIES

No. LTMS316811051/DV 10-30v Side Amber
wgt. 0.05kg Size: L59 x W36 x D77mm

- Multi-voltage
- IP68 Rated
- 500mm Fly-lead
- Plastic pendant bracket
- Cylon LED unit

LED

LED Side Marker Lamp
Pendant Housing

CYLON SERIES

No. LTMS316821051/DV 10-30v Side Amber
wgt. 0.09kg Size: L103 x W89 x D72mm

- Multi-voltage
- Heavy-Duty plastic pendant housing
- 500mm Fly-lead
- IP68 Rated
- Cylon LED unit

LED

LED Number Plate Lamp
Pendant Housing

CYLON SERIES

No. LTMS316891050/DV 10-30v Clear
wgt. 0.09kg Size: L100 x W69 x D90mm

- Multi-voltage
- Heavy-Duty angled plastic pendant housing
- 500mm Fly-lead
- Suitable for both square and rectangular plates
- IP68 Rated
- Cylon LED unit

LED

LED Twin Function Position Lamp
Rubber Housing

CYLON SERIES

No. LTMS316871054/DV 10-30v Red/Clear
wgt. 0.27kg Size: L185mm

- Multi-voltage
- Heavy-Duty rubber housing
- 500mm Fly-lead
- IP68 Rated
- Cylon LED unit

Welwyn Garden City tel +44 (0)1707 371161 fax +44 (0)1707 372603
Coseley tel +44 (0)121 520 0100 fax +44 (0)121 522 3889
website www.cbf.uk.com e-mail: sales@cbf.uk.com

ELECTRICAL – MARKER LAMPS

LED

LED Side Marker Lamp
Horizontal Bracket

30141 SERIES

No. LTMS30141/SH12	12v	Side	Amber
No. LTMS30141/SH24	24v	Side	Amber

wgt. 0.08kg
Size: L113 x W53 x D17mm

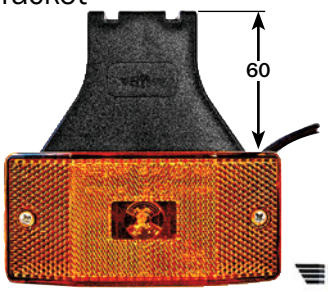

- Fully sealed
- Integral reflector
- IP56 Rated
- 500mm Fly-lead
- 60mm Deep bracket

LED

LED Side Marker Lamp
Horizontal Bracket

30157 SERIES

No. LTMS30157/SH12	12v	Side	Amber
No. LTMS30157/SH24	24v	Side	Amber

wgt. 0.06kg
Size: L100 x W50 x D34mm

- Fully sealed
- Integral reflector
- 500mm Fly-lead
- IP56 Rated
- 30mm Deep bracket

LED

LED Front, Rear & Side Marker Lamps
Surface Mounted

30157 SERIES

No. LTMS30157/S12	12v	Side	Amber
No. LTMS30157/S24	24v	Side	Amber
No. LTMS30157/F12	12v	Front	Clear
No. LTMS30157/F24	24v	Front	Clear
No. LTMS30157/R12	12v	Rear	Red
No. LTMS30157/R24	24v	Rear	Red

wgt. 0.05kg
Size: L100 x W35 x D20mm

- Fully sealed
- Integral reflector
- IP56 Rated
- 500mm Fly-lead

LED

LED Side Marker Lamp
Surface Mounted

30158 SERIES

No. LTMS30158/S12	12v	Side	Amber
No. LTMS30158/S24	24v	Side	Amber

wgt. 0.05kg
Size: L112 x W38 x D20mm

- Fully sealed
- Integral reflector
- IP56 Rated
- 500mm Fly-lead

ELECTRICAL – MARKER LAMPS

LED

LED Front, Rear & Side Marker Lamps
Surface Mounted

18 SERIES

No. LTMSFM18/12	12v	Front	Clear
No. LTMSFM18/24	24v	Front	Clear
No. LTMSRM18/12	12v	Rear	Red
No. LTMSRM18/24	24v	Rear	Red
No. LTMSSM18/12NB	12v	Side	Amber
No. LTMSSM18/24NB	24v	Side	Amber

wgt. 0.12kg Size: L100 x W50 x D33mm

- Terminal block connection
- IP67 Rated
- Integral reflector

PEREI LIGHTING ECE APPROVED EMC APPROVED

LED

LED Side Marker Lamp
Horizontal Bracket

18 SERIES

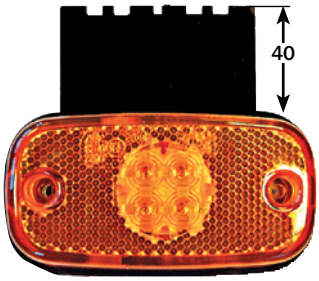

No. LTMSSM18/12H	12v	Side	Amber
No. LTMSSM18/24H	24v	Side	Amber

wgt. 0.13kg Size: L100 x W50 x D33mm

- Terminal block connection
- IP67 Rated
- Integral reflector
- Horizontal bracket – D40mm

PEREI LIGHTING ECE APPROVED EMC APPROVED

LED

LED Side Marker Lamp
Pendant Bracket

18 SERIES

No. LTMSSM18/12	12v	Side	Amber
No. LTMSSM18/24	24v	Side	Amber

wgt. 0.13kg Size: L100 x W50 x D33mm

- Terminal block connection
- IP67 Rated
- Integral reflector
- Pendant bracket – D60mm

PEREI LIGHTING ECE APPROVED EMC APPROVED

LED

LED Rear Marker Lamp
Surface Mounted

20 SERIES

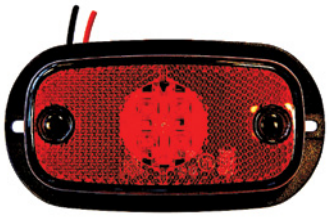

No. LTMSRM20/12	12v	Rear	Red
No. LTMSRM20/24	24v	Rear	Red

wgt. 0.08kg Size: L100 x W50 x D20mm

- IP67 Rated
- Integral reflector
- 400mm Fly-lead

PEREI LIGHTING ECE APPROVED EMC APPROVED

Welwyn Garden City tel +44 (0)1707 371161 fax +44 (0)1707 372603
Coseley tel +44 (0)121 520 0100 fax +44 (0)121 522 3889
website www.cbf.uk.com e-mail: sales@cbf.uk.com

ELECTRICAL – MARKER LAMPS

LED

LED Front, Rear & Side Marker Lamps
Surface Mounted

50 SERIES

No. LTMSFM50/DVFB	12-24v	Front	Clear
No. LTMSSM50/DVFB	12-24v	Side	Amber
No. LTMSRM50/DVFB	12-24v	Rear	Red

wgt. 0.07kg
Size: L120 x W45 x D16.5mm

- Multi-voltage
- IP67 Rated
- Integral reflector
- No visible fixings
- 500mm Fly-lead

ECE APPROVED EMC APPROVED

LED

LED Side Marker Lamp
Horizontal Bracket

50 SERIES

No. LTMSSM50/DVHB 12-24v Side Amber
wgt. 0.05kg
Size: L120 x W45 x D16.5mm

- Multi-voltage
- IP67 Rated
- Integral reflector
- No visible fixings
- 500mm Fly-lead

ECE APPROVED EMC APPROVED

LED Marker Lamp Bracket

50 SERIES

No. LTMSSM50/HB
wgt. 0.012kg

- Horizontal bracket
- Suits all 50 Series lamps – *shown above*

LED Marker Lamp Bracket

18 SERIES

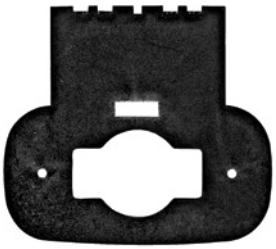

No. LTMS/F857
wgt. 0.011kg

- Horizontal bracket
- Suits all 18 Series lamps – *see page 84*

LED

LED Front & Rear Marker Lamp
Surface Mounted

60 SERIES

No. LTMSFM60/DVFB	12-24v	Front	Clear
No. LTMSRM60/DVFB	12-24v	Rear	Red

wgt. 0.04kg
Size: L70 x W42 x D24mm

- Multi-voltage
- IP67 Rated
- Integral reflector
- No visible fixings
- 500mm Fly-lead

ECE APPROVED EMC APPROVED

LED

LED Side Marker & Repeater
Horizontal Bracket & Surface Mounted

115 SERIES

No. LTMSPL115/S11/DV	12-24v	Side	Amber	Horizontal Bracket
No. LTMSPL115/S10/DV	12-24v	Side	Amber	Surface Mounted

wgt. 0.14kg
Size: L154 x W48 x D20mm

- Multi-voltage
- IP67 Rated
- Integral reflector
- 500mm Fly-lead
- No visible fixings

OVERVIEW

NEW side marker lamp including CAT5 side repeater for improved vehicle visibility in hazard situations and turning procedures.
The 2 part construction provides a simple installation and ensures easy replacement whilst in service. No tools are required to replace the lamp unit.

EMC APPROVED

ELECTRICAL – MARKER LAMPS

LED

LED Side Marker Lamp
Horizontal Bracket

2PS963 SERIES

No. 2PS963639067 12v Side Amber
No. 2PS963639077 24v Side Amber
wgt. 0.09kg Size: L110 x W48 x D25mm

- Horizontal Bracket – D23mm
- IP6K7 Rated
- Integral reflector
- 500mm Fly-lead

HELLA ECE APPROVED EMC APPROVED

LED

LED Side Marker Lamp
Surface Mounted

2PS963 SERIES

No. 2PS963639017 24v Side Amber
wgt. 0.07kg Size: L110 x W48 x D25mm

- IP6K7 Rated
- Integral reflector
- 500mm Fly-lead

HELLA ECE APPROVED EMC APPROVED

LED

LED Front & Rear End Outline Marker Lamp
Semi-Recessed Mounted

2PF959 & 2XA959 SERIES

No. 2PF959590207 10-33v Front Clear
No. 2XA959790407 8-28v Rear Clear lens, red when illuminated
wgt. 0.02kg Size: L80 x W23 x D6mm *lens protrusion*

- Multi-voltage
- IP6K7 Rated
- 500mm Fly-lead
- Integral reflector
- Gasket included

HELLA ECE APPROVED EMC APPROVED

LED

LED Front & Rear End Outline Marker Lamp
Surface Mounted

2PF959 & 2XA959 SERIES

No. 2PF959570207 10-33v Front Clear
No. 2XA959560407 8-28v Rear Clear lens, *red when illuminated*
wgt. 0.02kg
Size: L60 x W37 x D34mm

- Multi-voltage
- IP6K7 Rated
- Integral reflector
- Gasket included
- 500mm Fly-lead

HELLA ECE APPROVED EMC APPROVED

LED

LED Rear Outline Marker Lamp
Surface Mounted

2TM963 SERIES

No. 2TM963639307 12v Rear Red
No. 2TM963639317 24v Rear Red
wgt. 0.02kg Size: L110 x W48 x D25mm

- IP6K7 Rated
- **5000mm** Fly-lead – *Extended lead*
- Integral reflector
- Gasket included

HELLA ECE APPROVED EMC APPROVED

Welwyn Garden City tel +44 (0)1707 371161 fax +44 (0)1707 372603
Coseley tel +44 (0)121 520 0100 fax +44 (0)121 522 3889
website www.cbf.uk.com e-mail: sales@cbf.uk.com

ELECTRICAL – MARKER LAMPS

LED

LED Rear Combination Lamp
Function: Stop/Tail/Indicator

800 SERIES

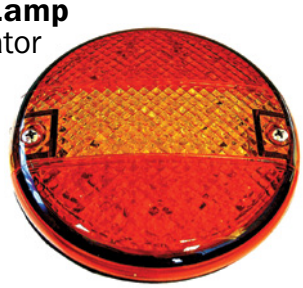

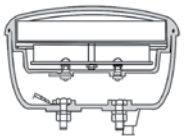

No. LTMSCRL800/12	12v	Red/Amber lens
No. LTMSCRL800/24	24v	Red/Amber lens
wgt. 0.40kg	Size: Ø140 x D61mm	

- Crystal optic lens system
- IP67 Rated
- Modular housing option
- Low current draw
- Superseal connectors available upon request
- Internal male tab (spade) connector terminals

PEREI LIGHTING ECE APPROVED EMC APPROVED

LED

LED Rear Fog Lamp
Function: Fog

800 SERIES

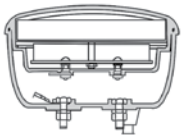

No. LTMSRF800/12	12v	Red lens
No. LTMSRF800/24	24v	Red lens
wgt. 0.40kg	Size: Ø140 x D61mm	

- Crystal optic lens system
- IP67 Rated
- Modular housing option
- Low current draw
- Superseal connectors available upon request
- Internal male tab (spade) connector terminals

PEREI LIGHTING ECE APPROVED EMC APPROVED

LED

LED Rear Reverse Lamp
Function: Reverse

800 SERIES

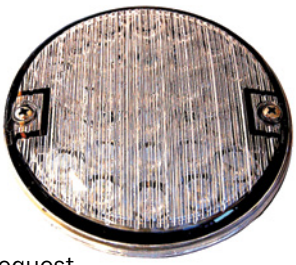

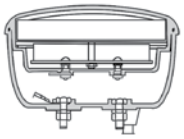

No. LTMSRV800/12	12v	Clear lens
No. LTMSRV800/24	24v	Clear lens
wgt. 0.40kg	Size: Ø140 x D61mm	

- Crystal optic lens system
- IP67 Rated
- Modular housing option
- Low current draw
- Superseal connectors available upon request
- Internal male tab (spade) connector terminals

PEREI LIGHTING ECE APPROVED EMC APPROVED

LED

LED Rear Fog, Indicator, Reverse, Stop/Tail Lamps

95 SERIES

No. LTMSFL25/LED12	12v	Amber lens	Indicator
No. LTMSFL25/LED24	24v	Amber lens	Indicator
No. LTMSRF7/LED12	12v	Red lens	Fog
No. LTMSRF7/LED24	24v	Red lens	Fog
No. LTMSRL800/LED12	12v	Clear lens	Reverse
No. LTMSRL800/LED24	24v	Clear lens	Reverse
No. LTMSSL9/LED12	12v	Red lens	Stop/Tail
No. LTMSSL9/LED24	24v	Red lens	Stop/Tail
wgt. 0.12kg	Size: Ø95mm		

- IP67 Rated
- Adapter Plate available (see below)
- Male superseal plug on unit & female superseal connector supplied

PEREI LIGHTING ECE APPROVED EMC APPROVED

Adapter Plate

95 SERIES

No. LTMSN677800/AP
wgt. 0.050kg

- Black plastic
- Suits all 95 SERIES lamps

PEREI LIGHTING

ELECTRICAL – MARKER LAMPS

BULB

Bulb Rear Combination Lamp

Function: Position/Side/Stop/Reverse/Direction Indicator/Reflex Reflector & Fog

No. LTMSL0302001/LH 12-24v Left hand

No. LTMSL0303001/RH 12-24v Right hand

wgt. 0.80kg Size: L350 x W130 x D83mm

Left hand

- Multi-voltage
- Cable gland exit
- Horizontal mounting
- Bulbs to suit (not included): – see page 73

4 x **No. BULB382** 12v x 21w
2 x **No. BULB245** 12v x 10w
4 x **No. BULB241** 24v x 21w
2 x **No. BULB246** 24v x 10w

ECE APPROVED

LED

LED Rear Combination Lamp

Function: Stop/Tail/Reverse/Direction Indicator/Reflex Reflector & Fog

No. LTMSL7800L/DV 12-24v 5 Function
Suitable for left and right hand fitment

No. LTMSL7801L/DV 12-24v 5 Function*
Suitable for left and right hand fitment

wgt. 0.73kg Size: L345 x W126 x D35mm

- Multi-voltage
- Direct replacement for many O.E. lights
- General purpose
- 5 Year warranty
- Low current draw
- 450mm Fly-lead

* LTMSL7801L/DV, 5 Function & red side marker (which is permitted under the requirement of ECE Reg. 48 & Reg. 91)

ECE APPROVED EMC APPROVED

LED

LED Stop Lamp – 3rd Stop Light

Surface Mounted

No. LTMS313630252/12 12v Black bracket/Red lens

No. LTMS313630252/24 24v Black bracket/Red lens

wgt. 0.17kg Size: L274 x W34 x D31mm

- 28 LED's
- IP66 Rated
- 2400mm Fly-lead
- Category S3 Approved
- Supplied complete with 2 x mounting screws
- Suitable for ADR fitment

SIM ECE APPROVED

LED

LED Stop Lamp – 3rd Stop Light

Recessed Fitment

No. LTMS313550252/12 12v Red lens

No. LTMS313550252/24 24v Red lens

wgt. 0.12kg Size: L350 x W15 x D27mm

- 28 LED's
- IP66 Rated
- 2400mm Fly-lead
- Category S3 Approved

SIM ECE APPROVED EMC APPROVED

Welwyn Garden City tel +44 (0)1707 371161 fax +44 (0)1707 372603
Coseley tel +44 (0)121 520 0100 fax +44 (0)121 522 3889
website www.cbf.uk.com e-mail: sales@cbf.uk.com

ELECTRICAL – MARKER LAMPS

LED

LED Twin Function Position Lamp
Rubber Housing

No. LTMS316871054/DV 10-30v Red/Clear lens
wgt. 0.27kg Size: L185mm

- Multi-voltage
- Heavy-Duty rubber housing
- 500mm Fly-lead
- IP68 Rated
- *To see all of the 'CYLON' Range go to page 82*

SIM CYLON ECE APPROVED EMC APPROVED

LED

LED Triple Function Position Lamp
Rubber Housing

Right hand

No. LTMS31740105004/24 24v Red/Clear/Amber lens Nearside fitment (LH)
No. LTMS31740105104/24 24v Red/Clear/Amber lens Offside fitment (RH)
wgt. 0.18kg Size: L170mm

Left Hand

- Heavy-Duty rubber housing
- 500mm Fly-lead
- IP67 Rated
- Flexible rubber arm
- 12v Available to order

SIM ECE APPROVED EMC APPROVED

LED

Reading / Map Light
LED

No. LTMS/ML2271 12v
wgt. 0.30kg
Size: L460 x Ø10mm

- Red & White light output
- 72 Lumen output/0.07amp
- Integrated On/Off switch
- Flexible body allows the light to be angled in different directions

EMC APPROVED

72 LUMENS

Labcraft

BULB

Docking Lights
Halogen

SOLD IN PAIRS

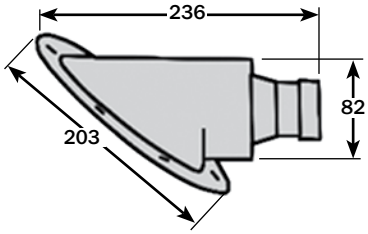

No. 1NB998546811 24v
wgt. 0.35kg/pair

- Wide & long range illumination
- 6.3mm Flat plug connectors
- Supplied with self-adhesive gasket
- 70W Halogen bulb
- Ideally suited for use with horseboxes, race car transporters, etc.
- Can be used with a 12v system by simply changing the bulbs – see below
- Bulbs to suit (not included): – see page 73

No. BULB453 12v x 55w
No. BULB460 24v x 70w

HELLA

ELECTRICAL – NUMBER PLATE LAMPS

Number Plate Lamp
Bulb

BULB

No. 2KA001389107 12-24v
wgt. 0.04kg
Size: L80 x W27 x D33mm

- Multi-voltage
- Black plastic body
- Bulbs to suit (not included):
  No. BULB239 12v x 5w
  No. BULB242 24v x 5w
  see page 73
- Suitable for both square and rectangular plates
- 2 Lamps required for ECE approval

CBF 1 CBF 1

Number Plate Lamp
LED

LED

No. LTMS26800/DV 12-24v
wgt. 0.06kg
Size: L90 x W46 x D30mm

- Multi-voltage
- Black plastic body
- Surface mounted bracket
- Powerful light output
- 500mm Fly-lead
- IP67 Rated
- Suitable for both square and rectangular plates
- Only 1 Lamp required for ECE approval on square plates

CBF 1 CBF 1

Number Plate Lamp
LED

LED

No. LTMS316891050/DV 10-30v
wgt. 0.09kg
Size: L100 x W69 x D90mm

- Multi-voltage
- Heavy-Duty angled plastic pendant housing
- 500mm Fly-lead
- IP68 Rated
- Suitable for both square and rectangular plates
- 2 Lamps required for ECE approval
- *To see all of the 'CYLON' Range see page 82*

CBF 1 CBF 1

Number Plate Lamp
LED

LED

No. LTMS26256/DV 12-24v
wgt. 0.07kg
Size: L86 x W39 x D37mm

- Multi-voltage
- Grey plastic body
- Surface mounted bracket
- Powerful light output
- 450mm Fly-lead
- Suitable for rectangular plates
- 2 Lamps required for ECE approval

CBF 1

Number Plate Lamp
LED

LED

No. LTMSMB153C/141/DV 9-32v
wgt. 0.08kg
Size: L84 x W55 x D69mm

- Multi-voltage
- Black plastic body
- Surface mounted bracket available
- 100,000 hour rated life
- IP67 Rated
- 100mm Fly-lead
- Suitable for both square and rectangular plates
- 2 Lamps required for ECE approval

CBF 1 CBF 1

Number Plate Lamp
LED

LED

No. LTMSNPL94/LED12 12v
No. LTMSNPL94/LED24 24v
wgt. 0.04kg
Size: L70 x W33 x D26mm

- Black plastic body
- Surface mounted bracket
- 100,000 hour rated life
- 500mm Fly-lead
- IP67 Rated
- Suitable for square plates
- 2 Lamps required for ECE approval

CBF 1

Welwyn Garden City tel +44 (0)1707 371161 fax +44 (0)1707 372603
Coseley tel +44 (0)121 520 0100 fax +44 (0)121 522 3889
website www.cbf.uk.com e-mail: sales@cbf.uk.com

ELECTRICAL – WARNING LIGHTS

LED Beacon
Compact

LED

No. LTMS26904/DV 12-24v
wgt. 0.68kg
Size: Ø160 (base) x H108mm

- Clear lens / illuminates amber
- Mounting pad
- Multi-voltage
- Beacon Ø116mm
- 3 Bolt fixing
- 5 flash patterns
- IP67 Rated
- 280mm Fly-lead
- Plastic base

ECE APPROVED
EMC APPROVED
maxi-lux

LED Beacon
Compact

LED

No. LTMSRCV9810/DV 12-24v
wgt. 0.61kg
Size: Ø144 x H96mm

- Multi-voltage
- 3 Bolt fixing
- Adjustable flash patterns
- IP67 Rated
- 200mm Fly-lead
- Polycarbonate lens
- 20 LED's
- On/Off rocker switch & cable

ECE APPROVED
EMC APPROVED

LED Beacon
Slimline

LED

No. LTMSRCV9811/DV 12-24v
wgt. 0.18kg
Size: Ø130 x H53mm

- Multi-voltage
- 3 Bolt fixing
- Adjustable flash patterns
- IP67 Rated
- 200mm Fly-lead
- On/Off rocker switch & cable
- Polycarbonate lens
- 20 LED's

ECE APPROVED
EMC APPROVED

LED Beacon
Compact Design

LED

No. LTMS26910/DV 12-24v
wgt. 0.60kg
Size: Ø160 (base) x H88mm

- Multi-voltage
- 5 Flash patterns
- Regulation 65 approved
- IP67 Rated
- 3 Bolt fixing
- Aluminium base
- 280mm Fly-lead

REG 65 APPROVED
ECE APPROVED
EMC APPROVED
maxi-lux

LED Beacon
Compact Design
Magnetic Mount

LED

No. LTMS26910/DV/MAG 12-24v
wgt. 1.10kg
Size: Ø200 (base) x H100mm

- Multi-voltage
- Magnetic mount
- Regulation 65 approved
- 5 Flash patterns
- 1000mm Flexi fly-lead
- IP69K Rated

REG 65 APPROVED
ECE APPROVED
EMC APPROVED
maxi-lux

ELECTRICAL – WARNING LIGHTS

LED

LED Warning Lamp
Surface Mounted

No. LTMSPL355/S01/DV 12-24v Amber 12 LED's
wgt. 0.15kg Size: L136 x W56 x D25mm

- Clear lens / Amber LED's
- Multi-voltage
- 18 Flash patterns
- IP67 Rated
- 3 Year warranty
- 240mm Fly-lead
- Low power consumption – 5w
- Flash patterns can be synchronized
- 2 Part construction with hidden fixings

PEREI LIGHTING ECE APPROVED EMC APPROVED

LED

LED Warning Lamp
Surface Mounted

No. LTMS26091CA/DV 9-36v Amber 3 LED's
wgt. 0.10kg Size: L118 x W46 x D25mm
No. LTMS26903CA/DV 9-36v Amber 4 LED's
wgt. 0.13kg Size: L142 x W46 x D25mm

- Clear lens / Amber LED's
- Multi-voltage
- 12 Flash patterns can be synchronized with other units
- IP67 Rated
- 3/4 High intensity LED's
- Compact design
- 180mm Fly-lead
- 3 Year warranty

maxi-lux ECE APPROVED EMC APPROVED

LED

LED Warning Lamp
Surface Mounted

No. LTMS26908CA/DV 9-36v Amber 6 LED's
wgt. 0.11kg Size: L110 x W41 x D38mm

- Clear lens / Amber LED's
- Multi-voltage
- 12 Flash patterns can be synchronized with other units
- IP67 Rated
- Regulation 65 approved
- 3 Year warranty
- 180mm Fly-lead
- Compact design
- 6 High intensity LED's

Optional Recessed Bracket
No. LTMS26908/RBKT Bracket only
- Converts the light into a recessed version

maxi-lux ECE APPROVED EMC APPROVED REG 65 APPROVED

LED

LED Warning Lamp
Surface & Bracket Mounted

No. LTMS26906CA/DV 9-36v Amber 6 LED's
wgt. 0.38kg Size: L143 x W95 x D40mm

- Clear lens / Amber LED's
- Multi-voltage
- IP67 Rated
- 6 High intensity LED's
- 3 Year warranty
- 1800mm Fly-lead
- Aluminium housing
- Regulation 65 approved

Auxillary Bracket

Optional Auxilary Bracket
No. LTMS26906/BKT Bracket only (mounts directly to rear of light)

maxi-lux ECE APPROVED EMC APPROVED REG 65 APPROVED

Welwyn Garden City tel +44 (0)1707 371161 fax +44 (0)1707 372603
Coseley tel +44 (0)121 520 0100 fax +44 (0)121 522 3889
website www.cbf.uk.com e-mail: sales@cbf.uk.com

ELECTRICAL – WARNING LIGHTS

LED

LED Light Bar
Compact Design

No. LTMSPL140/S03/DV 12-24v
wgt. 1.50kg
Size: L387 x W219 x D75mm

- Low profile – 75mm
- 56 LED's
- Multi-voltage
- Regulation 65 approved
- Multiple flash patterns
- Clear lens/Amber LED's
- IP65 Rated
- Magnetic mount option available
- Low power consumption – 39w
- 360° Visibility
- 3 Year Warranty

PERCI LIGHTING ECE APPROVED EMC APPROVED REG 65 APPROVED

LED

LED Light Bar
Low Profile
Length: 1150mm & 1375mm

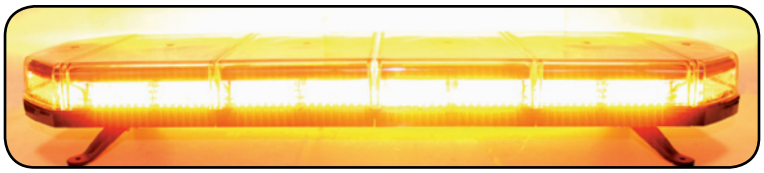

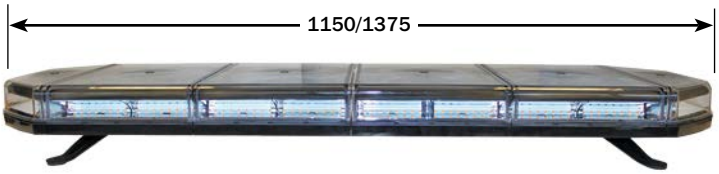

No. LTMSPL440/S01/DV 12-24v
wgt. 10.80kg
Size: L1150 x W305 x D121mm with mounting bracket
D75mm without mounting bracket

No. LTMSPL440/S02/DV 12-24v
wgt. 13.50kg
Size: L1375 x W305 x D121mm with mounting bracket
D75mm without mounting bracket

- Low profile – 75mm
- Multi-voltage
- Regulation 65 approved
- Multiple flash patterns
- Clear lens/Amber LED's
- IP65 Rated
- Low power consumption – 39w
- 360° Visibility
- 3 Year Warranty

PERCI LIGHTING ECE APPROVED EMC APPROVED REG 65 APPROVED

ELECTRICAL – WORKLAMPS

LED

LED 'Mini' Worklamp
800 Lumens

No. LTMS377/228/DV 12-36v 1 'CREE' LED
wgt. 0.17kg Size: W50 x H50 x D63mm

- Multi-voltage
- Robust aluminium housing
- 320mm Fly-lead
- 1 x 'CREE' LED
- Compact size
- Stainless steel mounting bracket
- Flood beam
- 10 Watt
- IP69K Rated
- 3 Year Warranty

ECE APPROVED EMC APPROVED

800 LUMENS maxi-lux

LED

LED Worklamp / Reversing Lamp
1200 Lumens

No. LTMS388/228/DV 9-36v 6 LED's
wgt. 0.52kg Size: W105 x H105 x D55mm

- ECE R23 Compliant.
  Must be in the declination angle of 30°
- Multi-voltage
- Robust aluminium housing
- 280mm Fly-lead
- 6 x High powered LED's
- Compact size
- Stainless steel mounting bracket
- Polycarbonate lens
- 3 Watt
- IP69K Rated
- 3 Year Warranty

ECE R23 APPROVED ECE APPROVED EMC APPROVED

1200 LUMENS maxi-lux

LED

LED Worklamp
3200 Lumens

No. LTMS399/228/DV 12-36v 4 'CREE' LED's
wgt. 0.52kg Size: W106 x H106 x D77mm

- Multi-voltage
- Robust aluminium housing
- 280mm Fly-lead
- 4 x 'CREE' LED's
- Compact size
- Stainless steel mounting bracket
- Polycarbonate lens
- 10 Watt
- IP69K Rated
- 3 Year Warranty

ECE APPROVED EMC APPROVED

3200 LUMENS maxi-lux

LED

LED Worklamp
1200 Lumens

No. LTMS250/228/DV 12-36v 6 LED's
wgt. 0.44kg Size: W150 x H51 x D61mm

- Multi-voltage
- Robust aluminium housing
- 280mm Fly-lead
- 6 x High powered LED's
- Compact size
- Stainless steel mounting bracket
- Polycarbonate lens
- 3 Watt
- IP69K Rated
- 3 Year Warranty

ECE APPROVED EMC APPROVED

1200 LUMENS maxi-lux

Welwyn Garden City tel +44 (0)1707 371161 fax +44 (0)1707 372603
Coseley tel +44 (0)121 520 0100 fax +44 (0)121 522 3889
website www.cbf.uk.com e-mail: sales@cbf.uk.com

ELECTRICAL – WORKLAMPS

BULB

Worklamp
Halogen

No. LTMS4207/00/GD 12-24v
wgt. 0.76kg
Size: Ø147mm

- Glass lens
- Black plastic body, handle & guard
- Bulbs to suit (not included): see page 73

No. BULB453 12v x 55w
No. BULB460 24v x 70w

BULB

Worklamp
Halogen

No. 1GA005060001 12-24v
wgt. 0.53kg
Size: L153 x W120 x D93

- Glass lens
- Black plastic body
- Bulbs to suit (not included): see page 73

No. BULB453 12v x 55w
No. BULB460 24v x 70w

Magnetic Mount
Stainless Steel

No. LTMS690032/MAG
wgt. 0.90kg Size: H48 x Bases Ø78mm

- Includes: 2 x Magnetic bases, bracket, nuts & bolts
- Tested to withstand 18kg of pulling resistance
- Suitable for all worklamps

maxi-lux

Voltage Converters
24Vdc – 12Vdc

These voltage converters offer a convenient way to operate mass produced 12Vdc equipment such as mobile phones, in-car entertainment, professional communication and telematics equipment, refrigerators, televisions etc. from the 24Vdc mobile electrical systems found on diesel engined vehicles and vessels.

No. LTMSAM02/PV3S 3 Amps continuous / 6 Amps intermittent
wgt. 0.22kg
Size: L87 x W67 x D50mm

No. LTMSAM05/PV6S 6 Amps continuous / 10 Amps intermittent
wgt. 0.27kg
Size: L89 x W87 x D50mm

No. LTMSAM08/PV12S 12 Amps continuous / 18 Amps intermittent
wgt. 0.45kg
Size: L127 x W87 x D50mm

- 24Vdc Input / 12Vdc Output
- Operating temperature: -25°C to +30°C
- Robust aluminium housing
- Non-Isolated
- Input voltage range: 17Vdc – 32Vdc
- Switch mode (Non-Linear)

GAS SPRINGS

Vari-Force Gas Springs
(Gas Struts)

Vari-Force Gas Springs are fitted with a gas release valve mounted at the lower end of the body.
The valve can be used to release gas from the unit to lower the force required to compress or extend it.
The gas is released by simply loosening the lock screw with the Allen key supplied, until gas is heard escaping.
Immediately re-lock the screw and try the unit.
Extreme care must be taken as a small amount of discharge dramatically lowers the units pressure.
The enclosed instructions must be adhered to in all applications – failure to do so will invalidate any warranty.

Part No.	Rod size (mm)	Open length (mm)	Eye/Eye end dia. (mm)	Stroke (mm)	Newton (N)	Weight (kg)
GASV08NAY0650/EE	8	485	8	200	650	0.27
GASV08PBC0650/EE	8	585	8	250	650	0.33
GASV10NAY1200/EE	10	515	10	200	1200	0.32
GASV10PBC1200/EE	10	605	10	250	1200	0.38

All Vari-Force Gas Springs are supplied with Eye Ends with either 8mm or 10mm fixing holes.
Ball Stud Ends can be supplied separately using the following part numbers:

No. GASEFBJ012Z/8BS Ball Joint End Fitting for 8mm rod

No. GASEFBJ006Z/10BS Ball Joint End Fitting for 10mm rod

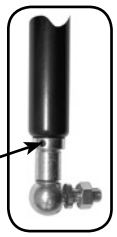

Ball Joint (BS)

Eye End (EE)

Gas Springs
(Gas Struts)

Self contained, maintenance free units. A hydro-pneumatic ram is charged under pressure with an inert gas giving the characteristics of a compression spring, which coupled with a small change in force as it extends, provides a controlled rate of movement.

- 2500 different combinations available upon request
- Safe to use with easy fingertip control
- Robust design

Ball Joint (BS)

Eye End (EE)

Alternative End Fitting:
No.GASEFBJ012Z/8BS

Ball Joint End Fitting for 8mm rod

Part No. (stocked)	Rod size (mm)	Open length (mm)	Eye/Eye end dia. (mm)	Stroke (mm)	Newton (N)	Weight (kg)
GAS8485/150BS	8	485	Ball Joint	200	150	0.25
GAS8585/400BS	8	585	Ball Joint	250	400	0.32
GAS8485/150EE	8	485	8	200	150	0.25
GAS8485/300EE	8	485	8	200	300	0.25
GAS8485/400EE	8	485	8	200	400	0.25
GAS8485/500EE	8	485	8	200	500	0.25
GAS8485/700EE	8	485	8	200	700	0.25
GAS8525/600EE	8	525	8	220	600	0.27
GAS10515/300BS	10	515	Ball Joint	200	300	0.32

For gas spring identification, please complete the form on Page 97

Welwyn Garden City tel +44 (0)1707 371161 fax +44 (0)1707 372603
Coseley tel +44 (0)121 520 0100 fax +44 (0)121 522 3889
website www.cbf.uk.com e-mail: sales@cbf.uk.com

GAS SPRINGS

Gas Spring
Identification / Order Form

Please photocopy or print this page from our website, fill in the relevant details and fax or email it to CBF for identification

PLEASE USE BLOCK CAPITALS

Company Name:	**Contact Name:**
Tel:	**Fax:**
E-Mail:	**Order No.:**

For **new** Gas Spring Identification please complete the following:

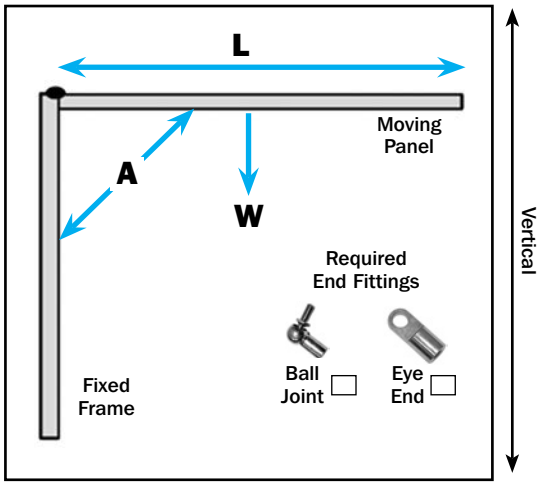

Where is the Hinge Pivot point on the lid?

Top face of lid

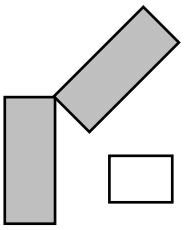

Lower face of lid

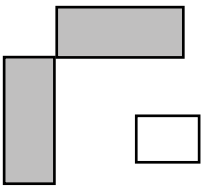

If your application frame is not vertical as shown in the diagram opposite please provide the following information.

Length of Lid from Hinge Pivot point to end of Lid **L**?

.....mm

What is the weight of the panel **W**?

.....kg

Panel thickness

.....mm

What is the required opening angle **A**?

.....degrees
(if no information here we will assume 90°)

For Existing Gas Spring Identification
Please complete the following:

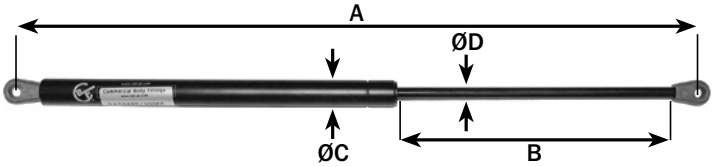

Part No. (any manufacturer) or identification marks

.....

A = Open Len	B = Stroke	C = Ø Body	D = Ø Rod	Newtons	Eye End	Ball Joint
.....	.....	.....	.....	.....	☐	☐

HANDLES

Handle
Stainless Steel

No. HAPL2550/265SS
wgt. 0.24kg

265mm Hole centres

- 2 x Ø10mm Fixing holes
- 304 Grade stainless steel

Handle
Chromium Plated Diecast Steel

No. HAPL2923/150
wgt. 0.19kg

150mm Hole centres

- 2 x Ø6mm Fixing holes

Handle
Chromium Plated Diecast Steel

No. HAPL2318
wgt. 0.08kg

150mm Overall

- 4 x Ø3.75mm Fixing holes

Handle
Chromium Plated Diecast Brass

No. HAPL3004
wgt. 0.17kg

170mm Hole centres

- 2 x Ø5mm Fixing holes

Handle
Black Plastic / Steel Core

No. HAPL3850/245
wgt. 0.26kg

245mm Hole centres

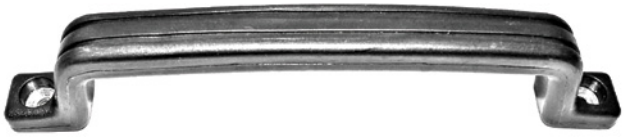

- 2 x Ø6mm Fixing holes

Handle
Black Plastic / Steel Core

No. HAPL3850/165
wgt. 0.18kg

165mm Hole centres

- 2 x Ø6mm Fixing holes

Welwyn Garden City tel +44 (0)1707 371161 fax +44 (0)1707 372603
Coseley tel +44 (0)121 520 0100 fax +44 (0)121 522 3889
website www.cbf.uk.com e-mail: sales@cbf.uk.com

HANDLES

Locker Handle
Black Plastic

No. HAPL9207 205mm Hole centres
wgt. 0.05kg

- 2 x Ø6mm Fixing holes

Handle
Black Plastic

No. HAPL9208 220mm Hole centres
wgt. 0.18kg

- 2 x Ø8mm Fixing holes

Steel Grab Handle – Diamond Pattern
Yellow Powder Coated

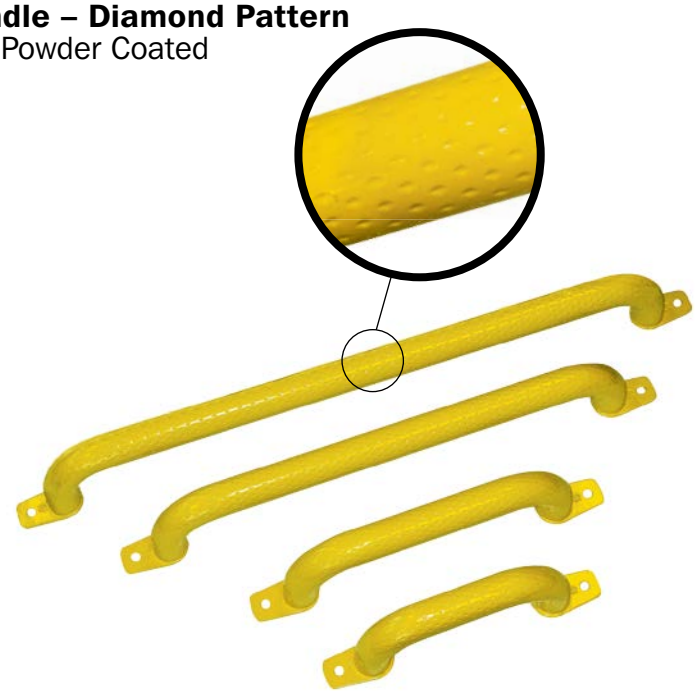

No. HAPL4700/250YEL 250mm Hole centres
wgt. 0.43kg

No. HAPL4700/340YEL 340mm Hole centres
wgt. 0.53kg

No. HAPL4700/550YEL 550mm Hole centres
wgt. 0.73kg

No. HAPL4700/720YEL 720mm Hole centres
wgt. 1.00kg

- 2 x Ø8mm Fixing holes
- Yellow Powder Coated
- 35mm Diamond pattern grip
- Heavy-Duty construction

Steel Grab Handle
Yellow Powder Coated

No. HAPL4650/360YEL 360mm Hole centres
wgt. 0.49kg

- 2 x Ø8mm Fixing holes
- Yellow Powder Coated
- Ø35mm Smooth grip
- Heavy-Duty construction

HANDLES

Handle
Zinc Plated

No. HAFL246
wgt. 0.16kg
Overall size: L100 x W75mm

- 4 x Ø7mm Fixing holes

Recessed Grab Handle
Black Steel

No. HAFL9/01115
wgt. 0.16kg
Overall size: L125 x W125mm
Recess: L105 x W105 x D16mm

- 4 x Ø5mm Countersunk fixing holes

Recessed Flush Handle
Black Steel

No. HAFL414
wgt. 0.12kg
Overall size: L133 x W60mm
Recess: L90 x W50 x D20mm

- 4 x Ø6.5mm Countersunk fixing holes

Recessed Flush Handle
Black Plastic

No. HAFL414/PL
wgt. 0.05kg
Overall size: L133 x W60mm
Recess: L90 x W45 x D20mm

- 4 x Ø6.5mm Countersunk fixing holes

'L' Shaped Handle
Chromium Plated

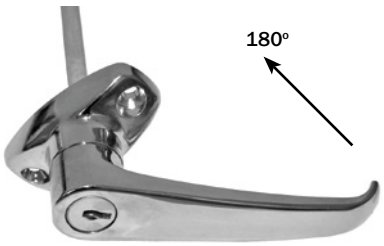

No. HALK1620/L Locking 2 way
wgt. 0.25kg 180° Rotation
No. HALK1620/P Non-Locking 2 way
wgt. 0.25kg 180° Rotation

- Supplied with gasket
- Handle: 101mm
- 45mm Hole centres
- Shaft: 105 x 7.8mm Square
- 2 x Ø5.5mm Fixing holes

'L' Shaped Handle
Chromium Plated

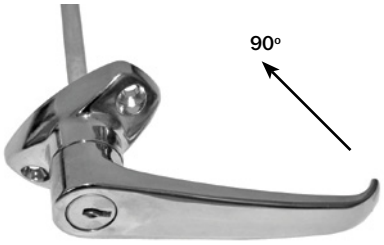

No. HALK4012/L Locking 1 way
wgt. 0.25kg 90° Rotation

- Supplied with gasket
- Handle: 101mm
- 45mm Hole centres
- Shaft: 105 x 7.8mm Square
- 2 x Ø5.5mm Fixing holes

'L' Shaped Handle
Chromium Plated

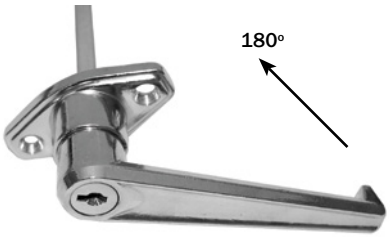

No. HALK2620/L Locking 2 way
wgt. 0.20kg 180° Rotation

- Handle: 101mm
- 45mm Hole centres
- Shaft: 69 x 7.8mm Square
- 2 x Ø5.5mm Fixing holes

'L' Shaped Handle
Chromium Plated

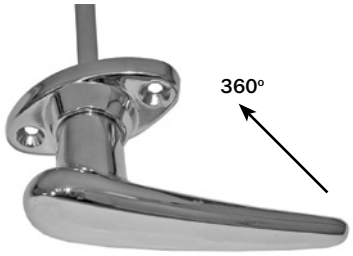

No. HALK1/16600 Non-Locking 2 way
wgt. 0.19kg 360° Rotation

- Handle: 105mm
- 45mm Hole centres
- Shaft: 115 x 7.8mm Square
- 2 x Ø5.5mm Fixing holes

Welwyn Garden City tel +44 (0)1707 371161 fax +44 (0)1707 372603
Coseley tel +44 (0)121 520 0100 fax +44 (0)121 522 3889
website www.cbf.uk.com e-mail: sales@cbf.uk.com

HANDLES

'T' Shaped Handle
Chromium Plated

No. HALK9012/L Locking 1 way
wgt. 0.23kg 90° Rotation

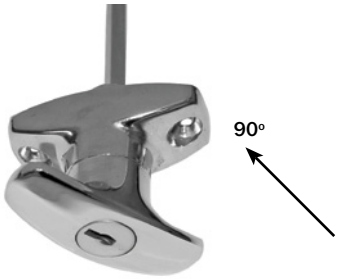

- Supplied with gasket
- Handle: 60mm
- 45mm Hole centres
- Shaft: 165 x 7.8mm Square
- 2 x Ø5.5mm Fixing holes

Padlockable Handle
Stainless Steel

No. HALK1000/LSS Padlockable 2 way
wgt. 0.38kg 360° Rotation

- Handle: 152mm
- Heavy-Duty
- 3 x Ø6.5mm Fixing holes
- Shaft: 82 x 7.8mm Square

Recessed Pan Locking Handle
Chromium Plated Handle / Black Pan

No. HALK9/00156 Locking
wgt. 0.44kg 90° Right hand rotation
Recess: L135 x W135 x D19mm

- 3 x Ø4.3mm Fixing holes
- Shaft: 120mm x 7.8mm square
- Supplied with 2 keys

Recessed 'T' Handle
Chromium Plated Handle / Black Pan

No. HALK9/00186 Locking
wgt. 0.36kg 180° Rotation
Size: L125mm x W125mm Recess: Ø105 x D15mm

- 4 x Ø5mm Countersunk fixing holes
- Shaft: 110mm x 7.8mm square
- Supplied with 2 keys
- Non-Locking handle available upon request

Recessed Compression Latch
Black Nylon

No. HALK9/03000/01 Locking
wgt. 0.75kg
Size: L150 x W120mm x D72 max.

- Latching point can be fixed above or below the handle
- Water and corrosion resistant
- Invisible fixing – 2 x M8 locknuts
- Gasket seal
- 6mm 'take-up' to make seal against gasketed doors
- Supplied with 2 keys

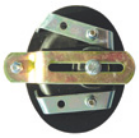
Rear View

28-55mm of latch bar adjustment

HANDLES

Slam Lock
Surface Mounted / Zinc Plated

No. LKSL55/LH Left Hand
No. LKSL55/RH Right Hand
wgt. 0.29kg

- Backplate: L85 x W50mm
- Handle: L90mm
- 4 x ø5.8mm Fixing holes

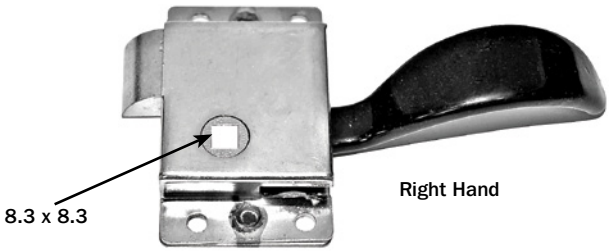

Slam Lock
Surface Mounted / Zinc Plated

No. LKSL394
wgt. 0.27kg

- Size: L87 x W68mm
- 4 x ø5mm Fixing holes
- Accepts 7.8mm square shaft

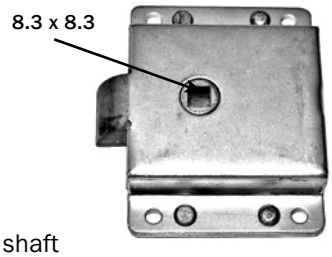

Cylinder Cam Lock and Wing Knob
Surface Mounted / Zinc Plated

No. HALK468267
wgt. 0.14kg

- 90° Rotation
- Supplied with 2 keys
- 18.5mm Grip range

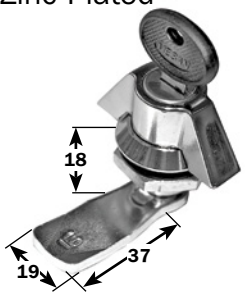

Inside Handle
Chromium Plated

No. HAINCBF114
wgt. 0.12kg
Overall size: L114mm

- Accepts 7.8mm square shaft
- Diecast steel

Inside Handle
Chromium Plated

No. HAIN9/00802
wgt. 0.19kg
Overall size: L153mm

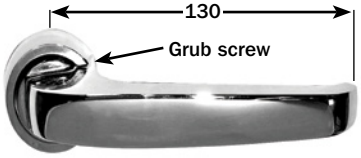

- Diecast steel
- Accepts 7.8mm square shaft
- Concealed grub screw fixing

Inside Handle
Chromium Plated

No. HAINCBF155
wgt. 0.12kg

- Overall size: L124mm
- Accepts 7.8mm square shaft
- Numerous mounting angles
- Diecast steel
- Grub screw fixing

Compartment Lock
Chromium Plated

No. LKMS90 90° Rotation
wgt. 0.08kg
No. LKMS180 180° Rotation
wgt. 0.08kg

- Size: ø17.5mm Body x L20mm
- Offset tongue: L50 x W15mm
- Supplied with 2 keys

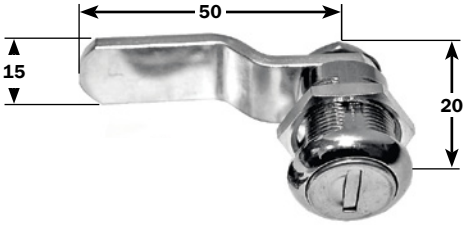

Welwyn Garden City tel +44 (0)1707 371161 fax +44 (0)1707 372603
Coseley tel +44 (0)121 520 0100 fax +44 (0)121 522 3889
website www.cbf.uk.com e-mail: sales@cbf.uk.com

HANDLES

Universal Budget Lock
Zinc Plated & Stainless Steel

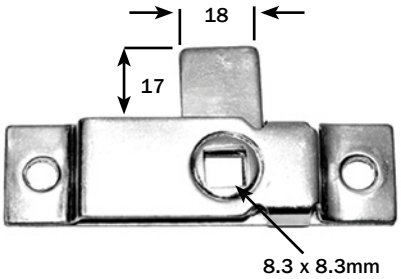

No. LKBD9656/ZP Zinc plated
wgt. 0.06kg Overall: L85 x W23mm

No. LKBD9656/SS 304G Stainless steel
wgt. 0.06kg Overall: L85 x W23mm

- 2 x Ø6.5mm Fixing holes
- Held positively in open or closed position by concealed spring

Universal Budget Lock
Moulded Plastic

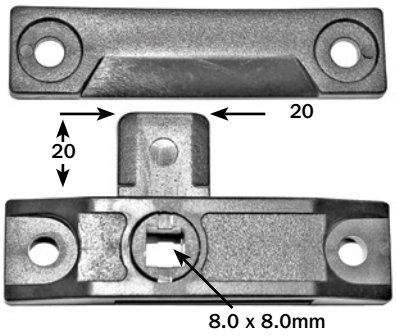

No. LKBD1956 Moulded plastic
wgt. 0.06kg Overall: L83 x W22mm

- 2 x Ø6.5mm Fixing holes
- Held positively in open or closed position by concealed spring
- Supplied with catch plate

Tee Keys
Zinc Plated

No. LKBD3840/83ZP Zinc plated
wgt. 0.07kg
Size: L83 x W62mm

No. LKBD3840/125ZP Zinc plated
wgt. 0.12kg
Size: L125 x W70mm

Padlock
Brass Body

No. LPAD150
wgt. 0.16kg
Body: L38 x W38mm

No. LPAD250
wgt. 0.33kg
Body: L50 x W50mm

- Supplied with 2 keys
- Can be supplied with 'keys alike' to order

Spring Loaded Escutcheon
Moulded Plastic

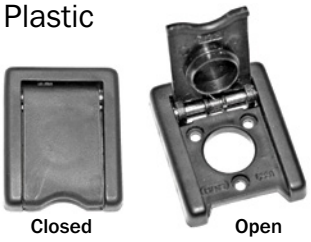

No. HAES6331
wgt. 0.01kg

- Size: L40 x W30mm
- Hole: Ø16mm
- 3 x Ø3.6mm Countersunk fixing holes
- Opens 150°

Spring Loaded Escutcheon
Chromium Plated Steel

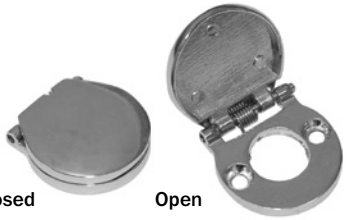

No. HAES106
wgt. 0.02kg

- Size: Ø28mm
- Hole: Ø13mm
- 2 x Ø3.4mm Countersunk fixing holes
- Opens 110°

P279

P40-50

P23-29

P204-206

HANDLES

Recessed 'Mini' Paddle Handle
Stainless Steel

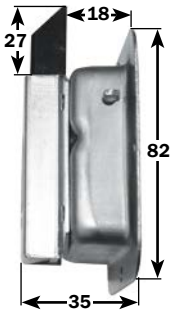

No. LPAD1100/LSS Locking
wgt. 0.29kg

- Size: L82 x W82 x D35mm
- Cut-out required: L64 x W62 x D37mm
- Supplied with rubber gasket & 2 keys

Recessed Paddle Handle
Stainless Steel

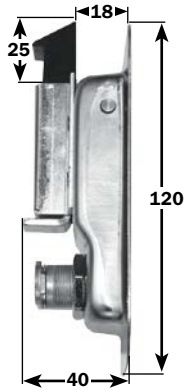

No. LPAD1300/LSS Locking
wgt. 0.40kg

- Size: L120 x W95 x D40mm
- Cut-out required: L94 x W65 x D42mm
- Supplied with rubber gasket & 2 keys

Recessed Paddle Handle
Zinc Plated & Stainless Steel

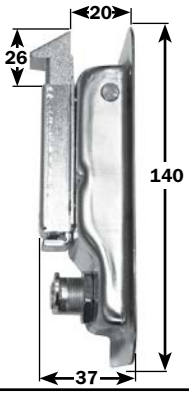

No. LPAD1500/LSS Locking
wgt. 0.56kg Stainless steel

No. LPAD1500/LZP Locking
wgt. 0.56kg Zinc plated

- Size: L140 x W108 x D37mm
- Cut-out required: L113 x W80 x D39mm
- Supplied with rubber gasket & 2 keys

Recessed Paddle Handle
Stainless Steel

Internal release handle

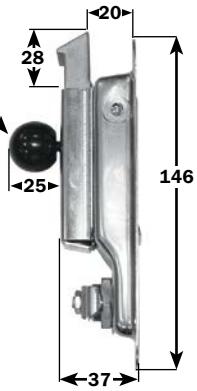

No. MRF202920203 Locking, complete
wgt. 0.60kg with internal release

- Size: L146 x W92 x D37mm
- Cut-out required: L126 x W69 x D38mm
- Supplied with 2 keys

No. MRF301010650 Gasket (optional)

Welwyn Garden City tel +44 (0)1707 371161 fax +44 (0)1707 372603
Coseley tel +44 (0)121 520 0100 fax +44 (0)121 522 3889
website www.cbf.uk.com e-mail: sales@cbf.uk.com

HANDLES

Recessed Drop 'T' Handle
Stainless Steel

No. HALK1503/NL Non-Locking
wgt. 0.58kg

- Size: L120 x W102 x D63mm
- Cut-out required: L96 x W76 x D65mm
- Supplied with gasket
- Handle turns anti-clockwise to release catch
- 4 x Ø5mm Fixing holes

Front

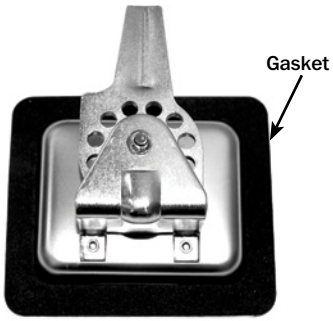

Rear

Recessed Drop 'T' Handle
Stainless Steel

No. HALK1503 Locking
wgt. 0.68kg

- Size: L120 x W123 x D66mm
- Cut-out required: L93 x W75 x D65mm
- Supplied with gasket & 2 keys
- Handle turns anti-clockwise to release catch
- 4 x Ø5mm Fixing holes

Front

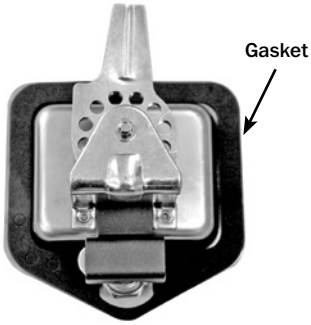

Rear

Recessed Drop 'T' Handle & 3 Way Catch System
Stainless Steel

No. HALK156101 Locking
wgt. 2.09kg

- Size: L120 x W124 x D43mm
- Cut-out required: L98 x W78 x D44mm
- Rod length: L1145 x Ø9.5mm, each
- Supplied with gasket & 2 keys
- Handle turns anti-clockwise to release catch
- 4 x Ø7mm Fixing holes

Recessed 'Oval' Paddle Handle
Black Nylon

No. HALK9/03419/01 Locking
wgt. 0.56kg

- Size: L150 x W120 x D39mm
- Cut-out required: L120 x W100 x D40mm (max)
- Supplied with 2 keys
- Invisible fixing
- Water & corrosion resistant
- Supplied with gasket seal
- Unit is mounted through aperture and is clamped by 2 'U' shaped brackets

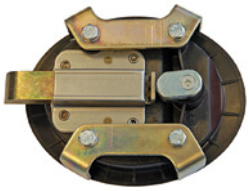
Rear View

HANDLES

Flush Compression Locking Latch
Black Powder Coated

No. HALK1619010/L Locking
wgt. 0.23kg Grip range: 1-25mm

- Size: H105 x W41 x D26mm
- Cut-out required: L96 x W23 x D32mm
- Supplied with gasket & 2 keys
- 2 Bolts are supplied to allow for adjustable grip length
- Adjustable grip length
- Operated by depressing front face
- Minimal front face protrusion
- Mounted via rear with a 'U' shaped bracket

No. HALK1619010/KEY Additional keys (x2)
wgt. 0.003kg

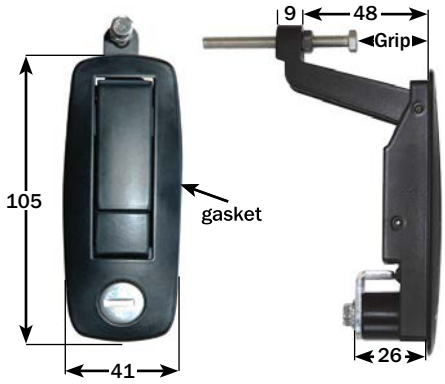

Flush Compression Locking Latch
Black Powder Coated

No. HALKC52115/3 Locking
wgt. 0.31kg Grip range: 1-11mm

No. HALKC52225/3 Locking
wgt. 0.31kg Grip range: 11-21mm

- Size: L110 x W50 x D23mm
- Adjustable grip length
- Push button operation
- Cut-out required: L90 x W35 x D24mm
- Fully sealed unit
- Minimal front face protrusion
- Supplied with 2 keys
- Mounted via rear with a 'U' shaped bracket

No. HALKC5/82 Gasket to suit

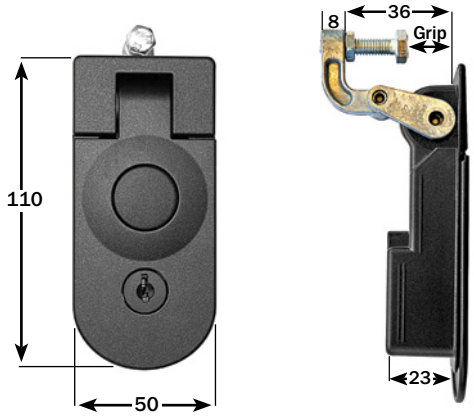

Flush Compression Locking Latch
Black Powder Coated

No. HALK7183/L Locking
wgt. 0.45kg Grip range: 1-48mm

- Size: H110 x W50 x D24mm
- Cut-out required: L89 x W34 x D23mm
- Supplied with gasket & 2 keys
- 2 Bolts are supplied to allow for adjustable grip length
- Push button operation
- Minimal front face protrusion
- Mounted via rear with a 'U' shaped bracket
- Fully sealed unit

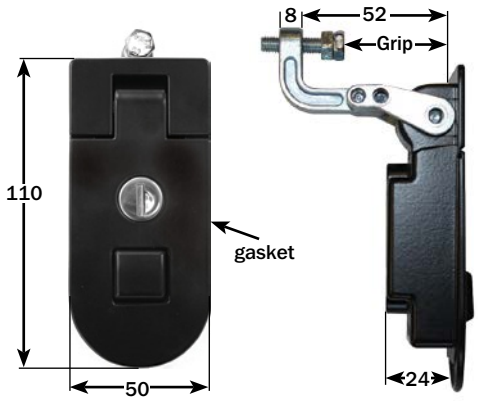

Welwyn Garden City tel +44 (0)1707 371161 fax +44 (0)1707 372603
Coseley tel +44 (0)121 520 0100 fax +44 (0)121 522 3889
website www.cbf.uk.com e-mail: sales@cbf.uk.com

HANDRAIL SOCKETS & TUBES

Handrail Tube – 4000mm
Chromium Plated Steel

No. MISC425 L4000 x Ø25mm o/d
wgt. 1.50kg

- Suits all handrail sockets – shown below
- Suitable for internal use only

Handrail Socket
Chromium Plated Brass

No. MISC1080/C Centre
wgt. 0.19kg

No. MISC1080/E End
wgt. 0.24kg

- 3 x Ø4.8mm Countersunk fixing holes
- Suitable for internal use only

1080/C

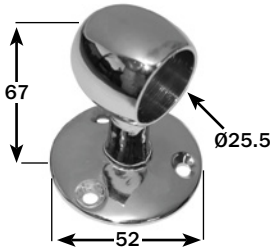

1080/E

Handrail Socket
Chromium Plated Brass

No. MISC957/C Centre
wgt. 0.19kg

No. MISC957/E End
wgt. 0.24kg

- 2 x Ø4.8mm Countersunk fixing holes
- Suitable for internal use only

957/C

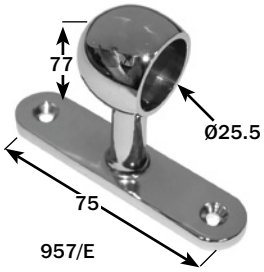

957/E

Handrail Tee Socket
Chromium Plated Brass

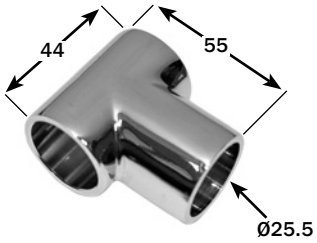

No. MISC1298 Tee, 3 way
wgt. 0.19kg

- Suitable for internal use only

Handrail Elbow Socket
Chromium Plated Brass

No. MISC3249 Elbow, 2 way
wgt. 0.14kg

- Suitable for internal use only

Handrail End Socket
Chromium Plated Brass

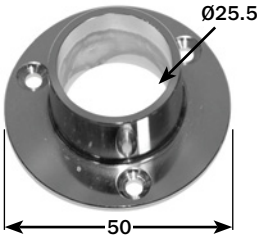

No. MISC3127/E End
wgt. 0.08kg

- 3 x Ø4.8mm Countersunk fixing holes
- Suitable for internal use only

HANDWASH UNITS

TEALwash

TEALwash is designed for use on many types of commercial vehicles including waste lorries, catering vans, emergency response vehicles, service vans and any other vehicle which requires hand hygiene on the move. Can be mounted either inside or outside the vehicle.

No. WSH/TEALWASH12 12 volt 220 watt / 20 amp max.
wgt. 4.70kg empty / 9.70kg full

No. WSH/TEALWASH24 24 volt 300 watt / 12.5 amp max.
wgt. 4.70kg empty / 9.70kg full

No. WSH/TEALWASH230 230 volt 500 watt / 3 amp max.
wgt. 4.70kg empty / 9.70kg full

Size: H485 x W300 x D355mm
(180mm clearance required above for lid operation)
5 litre capacity / 20 hand washes

Installation

Connect 2 x 4mm wires directly to the battery using the fuse holder supplied

- Bowl, tank & lid are double skinned in high impact resistant polyethylene
- Fully automatic operation – no separate switch needed
- Heater only operates when engine is running and battery fully charged – no drain on power
- Fast heating, 2-3 hot washes in 10 minutes
- 43/46°C ideal water temperature
- Fully opening lid for fast filling complete with 1 metre x 25mm flexible waste tube
- 'E' marked in compliance with the European EMC Automotive Directive 95/54/EC
- Soap & towel dispensers available – see page 109

HANDEMAN

HANDEMAN is designed for use on many types of commercial vehicles when fitting space is limited. Suitable for waste lorries, catering vans, emergency response vehicles, service vans and any other vehicle which requires hand hygiene on the move.

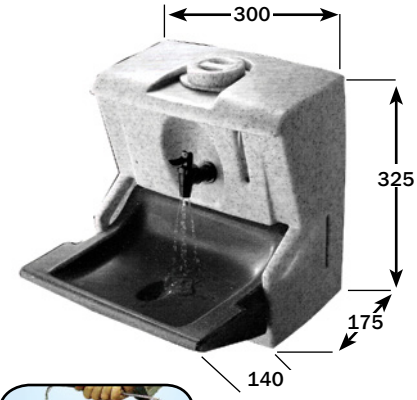

No. WSH/HANDEMAN12 12 volt 180 watt / 15 amp max.
wgt. 3.30kg empty / 5.50kg full

No. WSH/HANDEMAN24 24 volt 250 watt / 12 amp max.
wgt. 3.30kg empty / 5.50kg full

No. WSH/HANDEMAN230 230 volt 300 watt / 1 amp max.
wgt. 3.30kg empty / 5.50kg full
Size: H325 x W300 x D175mm
2.5 litre capacity / 10 hand washes

- Fully automatic
- 43°C ideal water temperature
- Unique waste water retaining bowl built to comply with Health & Safety Legislation for disposal of waste water
- Water level indicator
- Soap & towel dispensers available – see page 109

Also available:

HANDEMAN Low Power version HMP12 uses lighter socket.
Fitted with a 1.8 metre lead and DIN plug. It also has a handle for complete portability. Ideal for in-cab use.
HANDEMAN Portable Unit with excellent insulation properties of the HANDEMAN. The water will stay hot for up to 5 hours depending on the temperature of the pre-heated water used.
Supplied with mounting bracket and carrying handle. Ideal for many field and portable applications.

Welwyn Garden City tel +44 (0)1707 371161 fax +44 (0)1707 372603
Coseley tel +44 (0)121 520 0100 fax +44 (0)121 522 3889
website www.cbf.uk.com e-mail: sales@cbf.uk.com

HANDWASH UNITS

Compact Classic

Compact Classic combines the very popular TEAL quality brush stainless steel finish with the latest electronic technology, specifically designed to meet the rigours of everyday use in the most hostile of conditions, ideal for tarmac/white line layers, hot trades, and various construction and civil engineering projects.

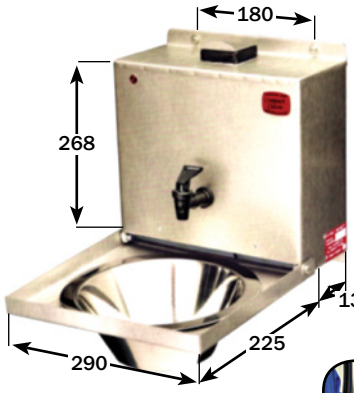

No. WSH/COMPACT12 12 volt 180 watt / 15 amp max.
wgt. 3.60kg empty / 7.40kg full

No. WSH/COMPACT24 24 volt 250 watt / 10 amp max.
wgt. 3.60kg empty / 7.40kg full
Size: H268 x W290 x D135mm
3.8 litre capacity / 15 x 10 second hand washes

Installation

Connect 2 x 4mm wires directly to the battery using the fuse holder supplied

- Fully automatic and battery safe
- Removable brushed stainless steel bowl for easy emptying.
- 45°C 'ideal' water temperature
- 'No water' safety cut-out
- Supplied with mounting kit
- 'E' marked in compliance with the European EMC Automotive Directive 95/54/EC
- Soap & towel dispensers available – see below

Paper Towel Dispenser

No. WSHTISD007/TD
Size: H365 x W255 x D120mm

Soap Dispenser

No. WSHDB21/SD
Capacity: 2 Litres

Smart Regenerative Charging System (SRCS)

With the recent advent of **SRCS** onto vehicles this affects the supply voltage by cutting out the alternator whilst the vehicle is running, when the battery is fully charged.
This has the effect of switching off the TEAL handwash units during the vehicle running time.
Contact us for more details

Swarfega Van Cradle

Skin Safety Centre

Three step skincare system to protect, cleanse & sanitise skin.

No. WSH/SVC01SP
wgt. 2.90kg

- Size: H260 x W305 x D100mm
- Kit consists of: 1 x Dispenser cradle complete with 'easy-push' buttons
  1 x 700ml Protective cream
  1 x 750ml Hand cleaner
  1 x 750ml Skin sanitiser

HINGES

Door Hinge – Raised Blade
Zinc Plated & Stainless Steel

No. HNVN7314/SS
wgt. 0.88kg

- 304G Polished stainless steel
- Complete with 304G stainless steel pin

No. HNVN7314/ZP
wgt. 0.88kg

- Zinc plated mild steel
- Complete with 304G stainless steel pin

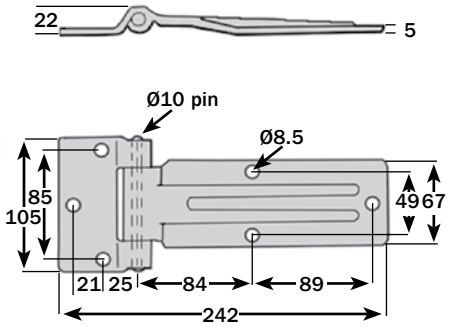

Door Hinge – Raised Blade
Zinc Plated & Stainless Steel

No. HNVN7516/SS
wgt. 0.16kg

- 304G Polished stainless steel
- Complete with 304G stainless steel pin

No. HNVN7516/ZP
wgt. 0.16kg

- Zinc plated mild steel
- Complete with 304G stainless steel pin

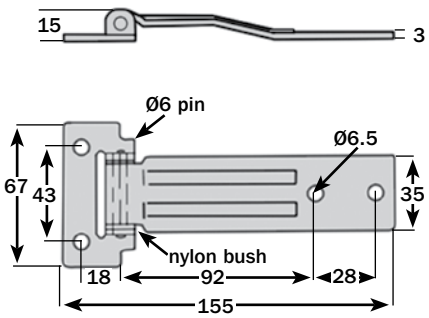

Door Hinge – Flat Blade
Zinc Plated & Stainless Steel

No. HNVN7920/SS
wgt. 0.77kg

- 304G Polished stainless steel
- Complete with 304G stainless steel pin

No. HNVN7920/ZP
wgt. 0.77kg

- Zinc plated mild steel
- Complete with 304G stainless steel pin

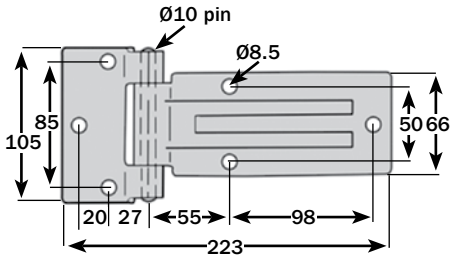

Door Hinge – Flat Blade
Zinc Plated & Stainless Steel

No. HNVN7718/SS
wgt. 0.14kg

- 304G Polished stainless steel
- Complete with 304G stainless steel pin

No. HNVN7718/ZP
wgt. 0.14kg

- Zinc plated mild steel
- Complete with 304G stainless steel pin

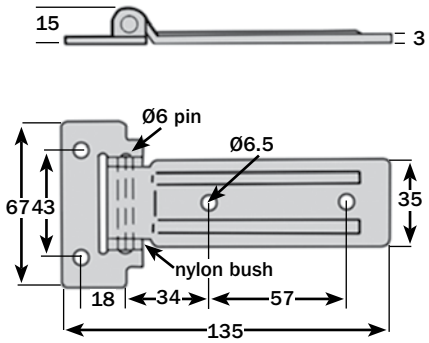

Welwyn Garden City tel +44 (0)1707 371161 fax +44 (0)1707 372603
Coseley tel +44 (0)121 520 0100 fax +44 (0)121 522 3889
website www.cbf.uk.com e-mail: sales@cbf.uk.com

HINGES

Door Hinge – Raised Blade
Zinc Plated & Stainless Steel

No. HNVN7930/SS
wgt. 0.42kg

- 304G Polished stainless steel
- Complete with 304G stainless steel pin

No. HNVN7930/ZP
wgt. 0.42kg

- Zinc plated mild steel
- Complete with 304G stainless steel pin

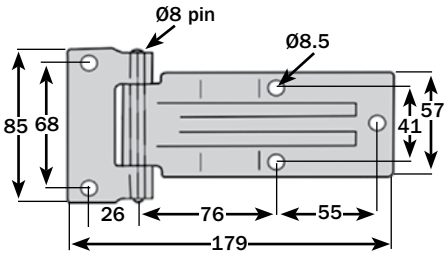

Door Hinge – Raised Blade
Zinc Plated & Stainless Steel

No. HNVN7110/SS
wgt. 0.20kg

- 304G Polished stainless steel
- Complete with 304G stainless steel pin

No. HNVN7110/ZP
wgt. 0.20kg

- Zinc plated mild steel
- Complete with 304G stainless steel pin

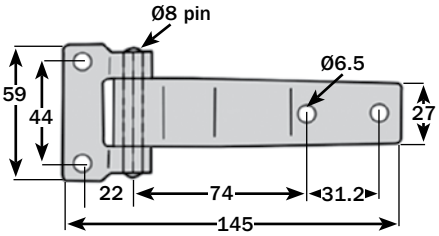

Door Hinge – Flat Blade
Zinc Plated & Stainless Steel

No. HNVN7090/SS
wgt. 0.25kg

- 304G Polished stainless steel
- Complete with 304G stainless steel pin

No. HNVN7090/ZP
wgt. 0.25kg

- Zinc plated mild steel
- Complete with 304G stainless steel pin

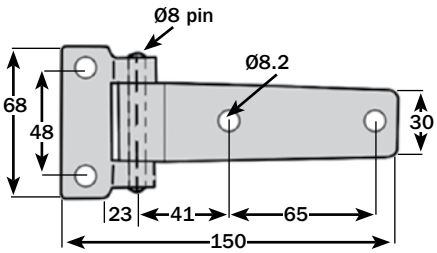

Door Hinge – 18mm Offset Flat Blade
Stainless Steel

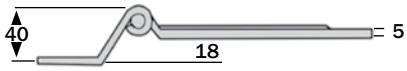

No. HNVN7920/18SS
wgt. 0.48kg

- 18mm Offset bracket
- 304G Polished stainless steel
- Complete with 304G stainless steel pin

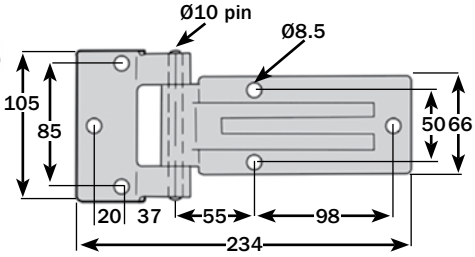

HINGES

Door Hinge – Raised Blade, Long Reach
Stainless Steel

Long Reach, designed to clear refrigeration door seal

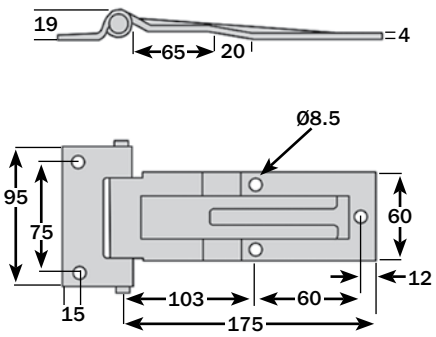

No. HNVN7417/SS
wgt. 0.70kg

- 304G Polished stainless steel
- Complete with 304G stainless steel pin

Luggage / Locker Compartment Hinge
Zinc Plated

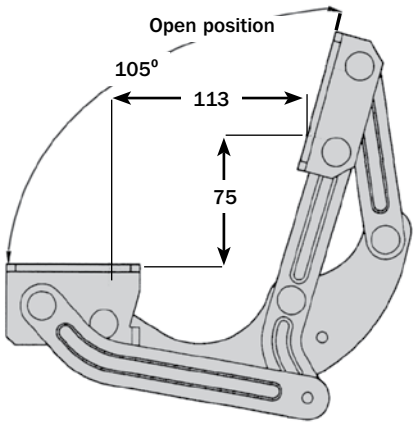

No. HNVNMO072/LH Left hand
wgt. 0.88kg

No. HNVNMO072/RH Right hand (illustrated)
wgt. 0.88kg

- To be used in conjunction with suitable gas struts

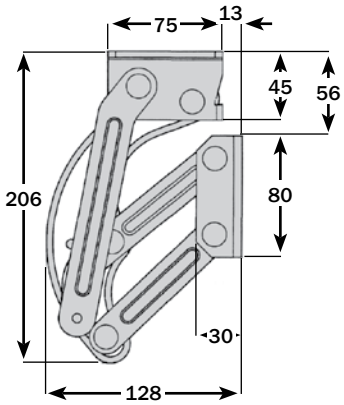

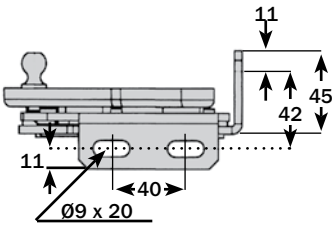

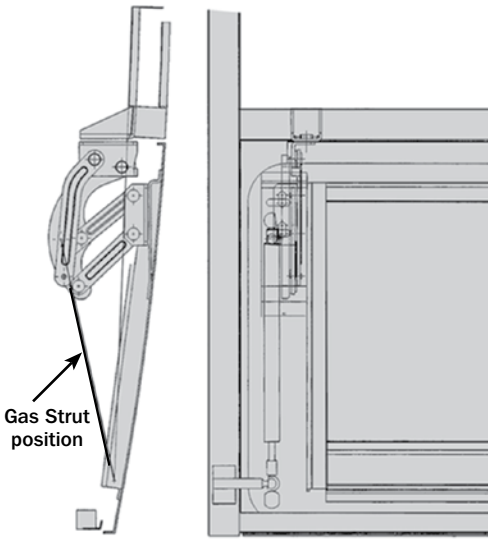

Welwyn Garden City tel +44 (0)1707 371161 fax +44 (0)1707 372603
Coseley tel +44 (0)121 520 0100 fax +44 (0)121 522 3889
website www.cbf.uk.com e-mail: sales@cbf.uk.com

HINGES

Hinges & components for the 63mm range can be purchased in either complete sets or separate parts to allow for many different configurations

63MM RANGE
GALVANIZED

Hinge Sets Complete
Galvanized

No. HNVN63300/HSGV
wgt. 1.25kg/set

- Each set comprises of: 1 x **HNVN63300/HBGV** Hinge blade
  1 x **HNVN63300/BBGV** Bracket
  1 x **HNVN63300/NBSS** Stainless steel nut & bolt
- Durable bright galvanized finish
- Stainless steel nut & bolt

Gasket Sets
1mm Natural Rubber

No. HNVN64295/GAS10 10 Per set
wgt. 0.18kg/set

- Suits all **HNVN64295** & **HNVN63300** Hinges
- Provides a barrier between the hinge base & door panel
- Anti-corrosion advantages

Hinge Blade Only
Galvanized

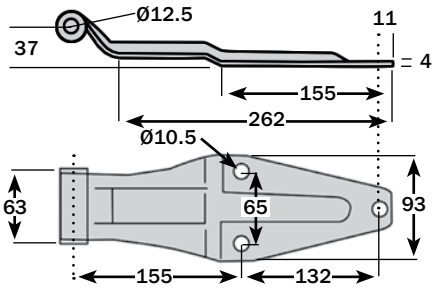

No. HNVN63300/HBGV
wgt. 0.80kg

- Galvanized steel
- Gaskets to suit – see above

Pressed Bracket, Bolt-on
Galvanized

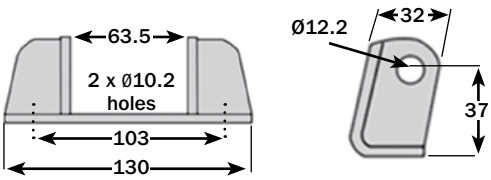

No. HNVN63300/BBGV
wgt. 0.34kg

- Galvanized steel

Bolt & Nut
304G Stainless Steel

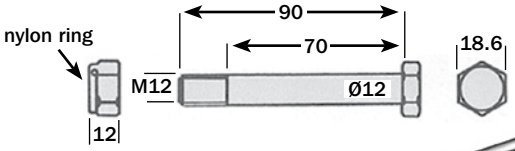

No. HNVN63300/NBSS
wgt. 0.11kg

Pin & Circlip
304G Stainless Steel & Zinc Plated

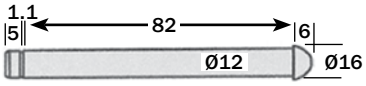

No. HNVN64295/PCSS Stainless steel
No. HNVN64295/PCZP Zinc plated
wgt. 0.10kg

HINGES

Hinges & components for the 64mm range can be purchased in either complete sets or separate parts to allow for many different configurations

64MM RANGE
ZINC PLATED

IMPORTANT

Zinc plating is only classed as a 'sacrificial' coating (gives itself up to the corrosive media).

A protective barrier (i.e. paint) is recommended to protect against moisture.

CBF cannot be held responsible for the effects of corrosion on zinc plated parts.

Hinge Sets Complete
Zinc Plated

No. HNVN64295/HSZP
wgt. 1.23kg/set — Zinc plated nut & bolt

- Each set comprises of: 1 x **HNVN64295/HBZP** — Hinge blade
  1 x **HNVN64295/BBZP** — Bracket
  1 x **HNVN64295/NBZP** — Zinc plated nut & bolt

No. HNVN64295/HSSZP
wgt. 1.23kg/set — Stainless steel nut & bolt

- Each set comprises of: 1 x **HNVN64295/HBZP** — Hinge blade
  1 x **HNVN64295/BBZP** — Bracket
  1 x **HNVN64295/NBSS** — Stainless steel nut & bolt

Gasket Sets
1mm Natural Rubber

No. HNVN64295/GAS10 10 Per set
wgt. 0.18kg/set

- Suits all **HNVN64295** & **HNVN63300** Hinges
- Provides a barrier between the hinge base & door panel
- Anti-corrosion advantages

Hinge Blade Only
Zinc Plated

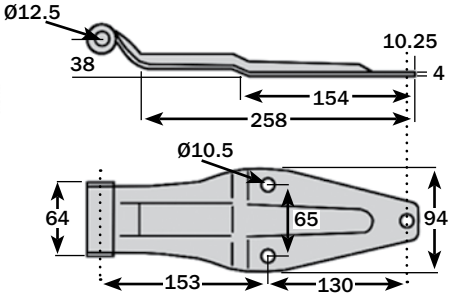

No. HNVN64295/HBZP
wgt. 0.78kg

- Zinc plated steel
- Nylon bushed
- Gaskets to suit – see above

Hinge Blade Only
Zinc Plated

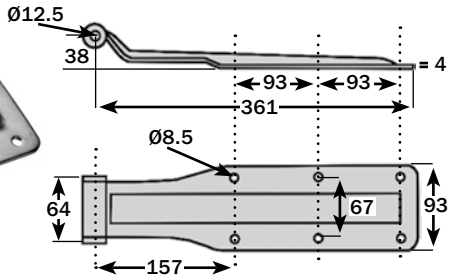

No. HNVN64360/HBZP
wgt. 1.10kg

- Zinc plated steel
- Nylon bushed

Hinge Blade Only
Zinc Plated Forged Steel

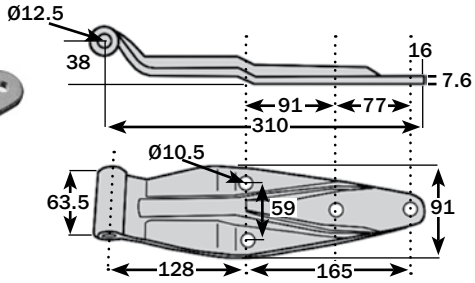

No. HNVN64310/HBCZP
wgt. 1.70kg

- Zinc plated steel
- Nylon bushed

Welwyn Garden City tel +44 (0)1707 371161 fax +44 (0)1707 372603
Coseley tel +44 (0)121 520 0100 fax +44 (0)121 522 3889
website www.cbf.uk.com e-mail: sales@cbf.uk.com

HINGES

Hinges & components for the 64mm range can be purchased in either complete sets or separate parts to allow for many different configurations

64MM RANGE
ZINC PLATED

Welded Bracket, Bolt-on
Zinc Plated

No. HNVN64295/BBUZP Upright posts
wgt. 0.25kg

No. HNVN64295/BBAZP Angled posts
wgt. 0.25kg

- Zinc plated steel

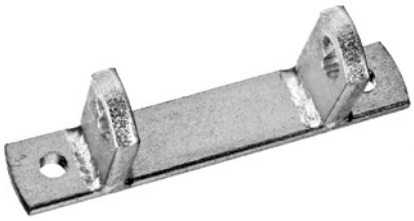

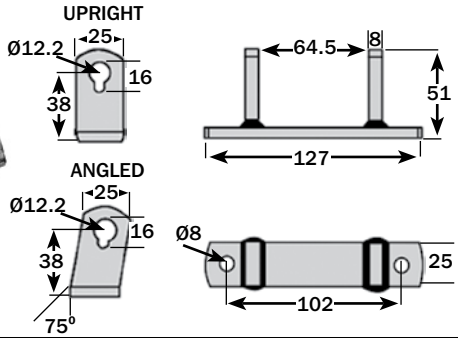

Pressed Bracket, Bolt-on
Zinc Plated

No. HNVN64295/BBZP
wgt. 0.34kg

- Zinc plated steel

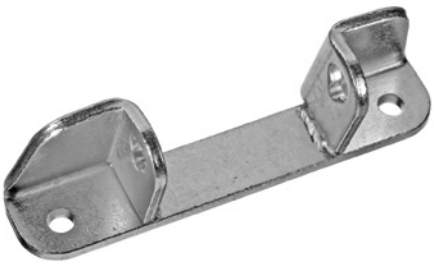

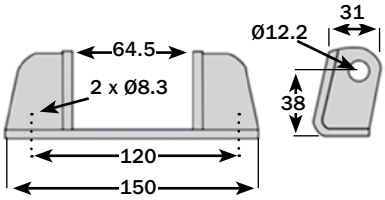

'U' Bracket, Bolt-on or Weld-on
Zinc Plated & Self Colour

No. HNVN64295/UBZP Zinc plated
wgt. 0.16kg

No. HNVN64295/UBSC Self colour
wgt. 0.16kg

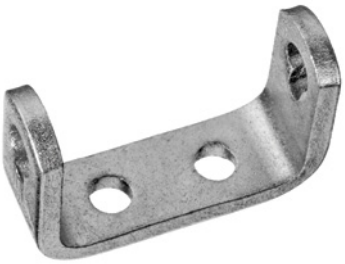

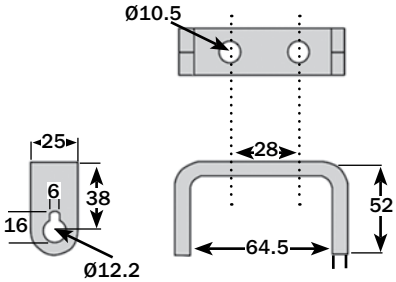

Narrow Base 'U' Bracket, Weld-on
Self Colour

No. HNVN64295/UB15
wgt. 0.14kg

- Self colour
- 15mm Base plate

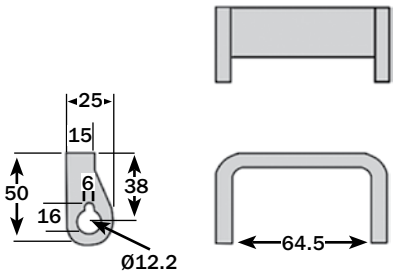

Bolt & Nut
Zinc Plated

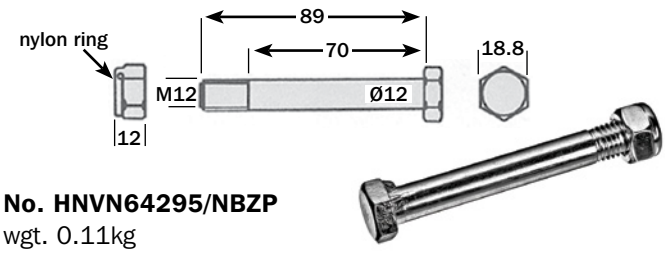

No. HNVN64295/NBZP
wgt. 0.11kg

Pin & Circlip
Zinc Plated

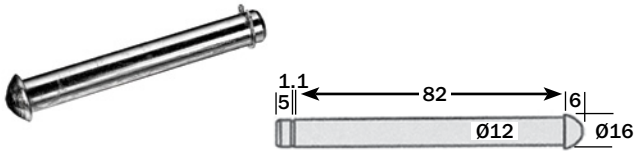

No. HNVN64295/PCZP
wgt. 0.10kg

Welwyn Garden City tel +44 (0)1707 371161 fax +44 (0)1707 372603
Coseley tel +44 (0)121 520 0100 fax +44 (0)121 522 3889
website www.cbf.uk.com e-mail: sales@cbf.uk.com

HINGES

Hinges & components for the 64mm range can be purchased in either complete sets or separate parts to allow for many different configurations

64MM RANGE STAINLESS STEEL

Hinge Sets Complete
Stainless Steel

No. HNVN64295/HSSS
wgt. 1.16kg/set

- Each set comprises of: 1 x **HNVN64295/HBSS** Hinge blade
  1 x **HNVN64295/BBSS** Bracket
  1 x **HNVN64295/NBSS** Stainless steel nut & bolt
- 304G Stainless steel

Gasket Sets
1mm Natural Rubber

No. HNVN64295/GAS10 10 Per set
wgt. 0.015kg/set

- Suits all **HNVN64295** & **HNVN63300** Hinges
- Provides a barrier between the hinge base & door panel
- Anti-corrosion advantages

Hinge Blade Only
Stainless Steel

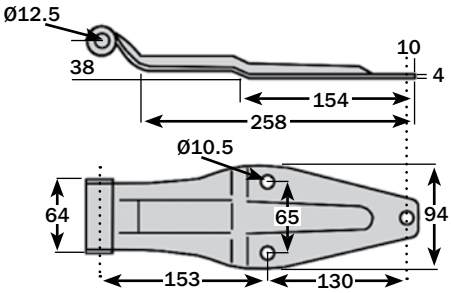

No. HNVN64295/HBSS
wgt. 0.78kg

- 304G Stainless steel
- Nylon bushed
- Gaskets to suit – see above

Hinge Blade Only
Stainless Steel

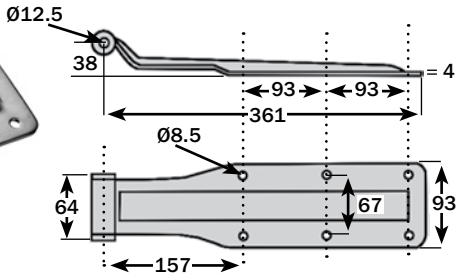

No. HNVN64360/HBSS
wgt. 1.10kg

- 304G Stainless steel
- Nylon bushed

Pressed Bracket, Bolt-on
Stainless Steel

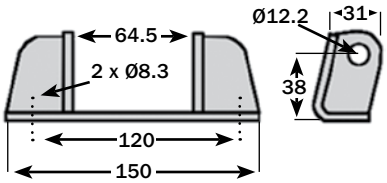

No. HNVN64295/BBSS
wgt. 0.27kg

- 304G Stainless steel

Welwyn Garden City tel +44 (0)1707 371161 fax +44 (0)1707 372603
Coseley tel +44 (0)121 520 0100 fax +44 (0)121 522 3889
website www.cbf.uk.com e-mail: sales@cbf.uk.com

HINGES

Hinges & components for the 64mm range can be purchased in either complete sets or separate parts to allow for many different configurations

64MM RANGE STAINLESS STEEL

'U' Bracket, Bolt-on / Weld-on
Stainless Steel

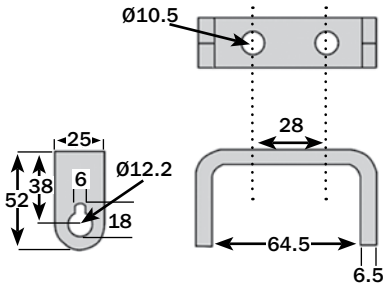

No. HNVN64295/UBSS
wgt. 0.16kg

- 304G Stainless steel

Bolt & Nut
Stainless Steel

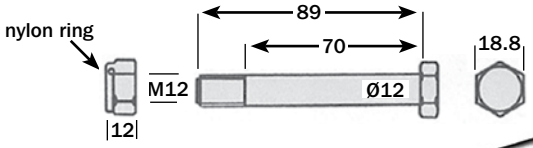

No. HNVN64295/NBSS
wgt. 0.12kg

- 304G Stainless steel

Pin & Circlip
Stainless Steel

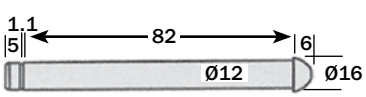

No. HNVN64295/PCSS
wgt. 0.10kg

- 304G Stainless steel

Hinges & components for the 74mm range can be purchased in either complete sets or separate parts to allow for many different configurations

74MM RANGE ZINC PLATED

Hinge Sets Complete
Zinc Plated

No. HNVN74310/HSZP
wgt. 1.21kg/set

- Each set comprises of: 1 x **HNVN74310/HBZP** Hinge blade
  1 x **HNVN74310/BBZP** Bracket
  1 x **HNVN74310/NBZP** Zinc plated nut & bolt
- Zinc plated steel

Gasket Sets
1mm Natural Rubber

No. HNVN74310/GAS10 10 Per set
wgt. 0.18kg/set

- Suits all **HNVN74310** Hinges
- Provides a barrier between the hinge base & door panel
- Anti-corrosion advantages

Replacement Bushes
White Plastic

No. HNVN74310/BUSH
wgt. 0.001kg

- Sold singly
- Suit the following hinge ranges: **HNVN63300**, **HNVN64295**, **HNVN64360**, **HNVN74310**

IMPORTANT

Zinc plating is only classed as a 'sacrificial' coating (gives itself up to the corrosive media).

A protective barrier (i.e. paint) is recommended to protect against moisture.

CBF cannot be held responsible for the effects of corrosion on zinc plated parts.

HINGES

Hinges & components for the 74mm range can be purchased in either complete sets or separate parts to allow for many different configurations

74MM RANGE
ZINC PLATED

Hinge Blade Only
Zinc Plated

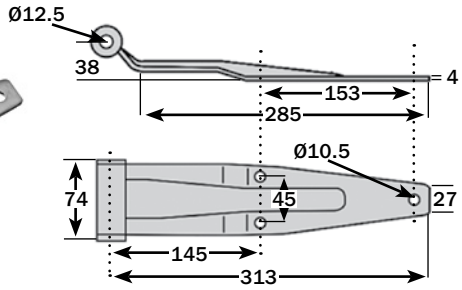

No. HNVN74310/HBZP
wgt. 0.87kg

- Zinc plated steel
- Nylon bushed
- For gaskets – see page 117

Pressed Bracket, Bolt-on
Zinc Plated

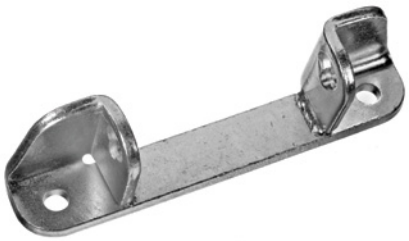

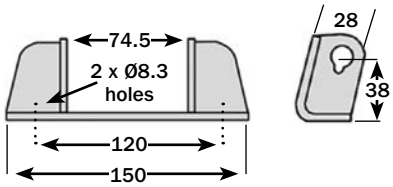

No. HNVN74310/BBZP
wgt. 0.23kg

- Zinc plated steel

'U' Bracket, Bolt-on or Weld-on
Zinc Plated & Self Colour

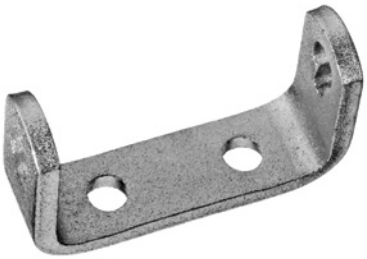

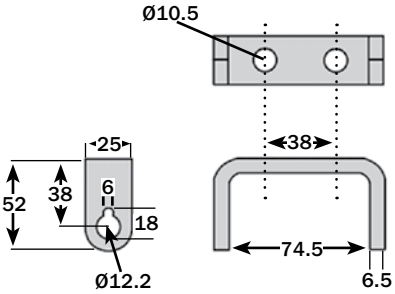

No. HNVN74310/UBZP Zinc plated
wgt. 0.17kg

No. HNVN74310/UBSC Self colour
wgt. 0.17kg

Narrow Base 'U' Bracket, Weld-on
Self Colour

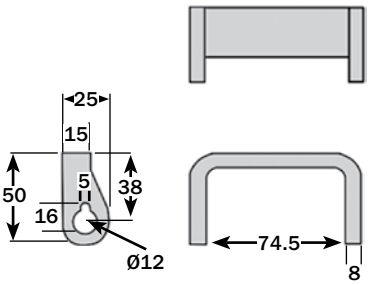

No. HNVN74310/UB15
wgt. 0.15kg

- Self colour
- 15mm Base plate

Bolt & Nut
Zinc Plated

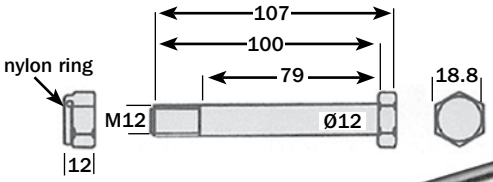

No. HNVN74310/NBZP
wgt. 0.11kg

Pin & Circlip
Zinc Plated

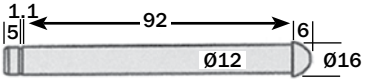

No. HNVN74310/PCZP
wgt. 0.10kg

Welwyn Garden City tel +44 (0)1707 371161 fax +44 (0)1707 372603
Coseley tel +44 (0)121 520 0100 fax +44 (0)121 522 3889
website www.cbf.uk.com e-mail: sales@cbf.uk.com

HINGES

Hinges & components for the 74mm range can be purchased in either complete sets or separate parts to allow for many different configurations

74MM RANGE STAINLESS STEEL

Hinge Sets Complete
Stainless Steel

No. HNVN74310/HSSS
wgt. 1.21kg/set

- Each set comprises of: 1 x **HNVN74310/HBSS** Hinge blade
  1 x **HNVN74310/BBSS** Bracket
  1 x **HNVN74310/NBSS** Stainless steel nut & bolt
- 304G Stainless steel
- For gaskets – see page 117

Hinge Blade Only
Stainless Steel

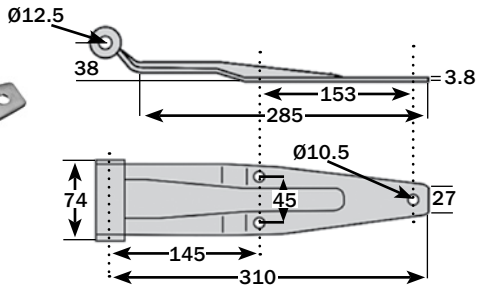

No. HNVN74310/HBSS
wgt. 0.87kg

- 304G Stainless steel
- Nylon bushed

Pressed Bracket, Bolt-on
Stainless Steel

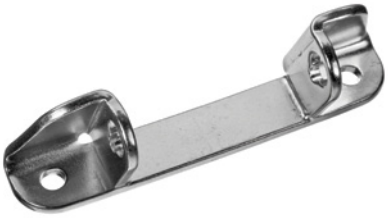

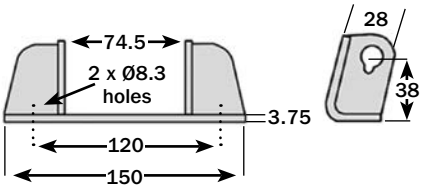

No. HNVN74310/BBSS
wgt. 0.22kg

- 304G Stainless steel

'U' Bracket, Bolt-on or Weld-on
Stainless Steel

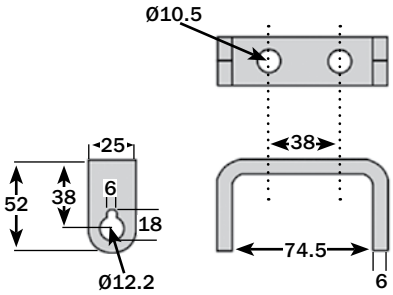

No. HNVN74310/UBSS
wgt. 0.17kg

- 304G Stainless steel

Bolt & Nut
304G Stainless Steel

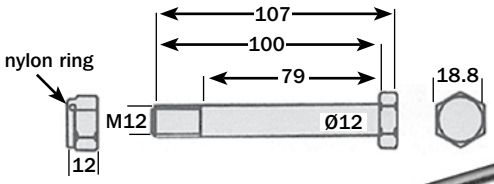

No. HNVN74310/NBSS
wgt. 0.12kg

Pin & Circlip
304G Stainless Steel

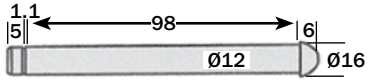

No. HNVN74310/PCSS
wgt. 0.10kg

Welwyn Garden City tel +44 (0)1707 371161 fax +44 (0)1707 372603
Coseley tel +44 (0)121 520 0100 fax +44 (0)121 522 3889
website www.cbf.uk.com e-mail: sales@cbf.uk.com

HINGES

Locker Hinge
Zinc Plated & Stainless Steel

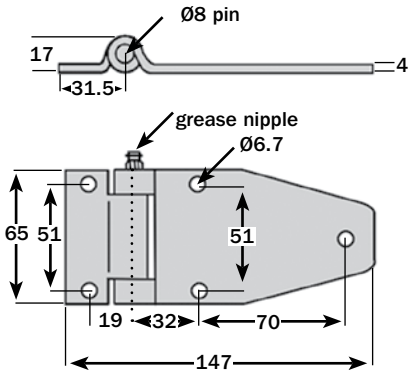

No. HNVN460/ZP Zinc plated
wgt. 0.34kg mild steel

No. HNVN460/SS 304G
wgt. 0.34kg Stainless steel

- Complete with grease nipple
- 304G Stainless steel pin
- Supplied with gasket set

Locker Hinge
Zinc Plated & Stainless Steel

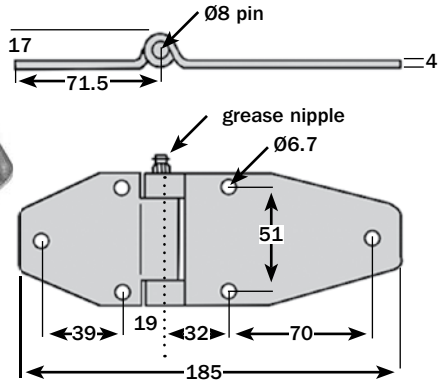

No. HNVN461/ZP Zinc plated
wgt. 0.38kg mild steel

No. HNVN461/SS 304G
wgt. 0.38kg Stainless steel

- Complete with grease nipple
- 304G Stainless steel pin
- Supplied with gasket set

Locker Hinge
Zinc Plated & Stainless Steel

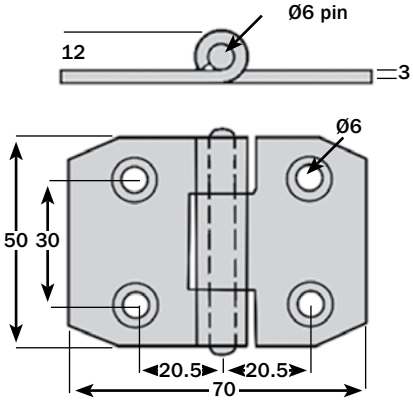

No. HNVN5068/ZP Zinc plated
wgt. 0.11kg mild steel

No. HNVN5068/SS 304G
wgt. 0.11kg Stainless steel

- 304G Stainless steel pin

Locker Hinge
Stainless Steel

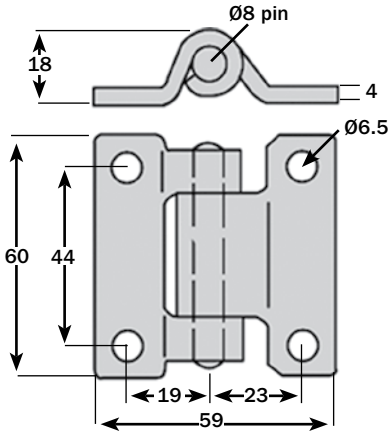

No. HNVN4025/SS 304G
wgt. 0.15kg Stainless steel

- 304G Stainless steel pin

Welwyn Garden City tel +44 (0)1707 371161 fax +44 (0)1707 372603
Coseley tel +44 (0)121 520 0100 fax +44 (0)121 522 3889
website www.cbf.uk.com e-mail: sales@cbf.uk.com

HINGES

Maintenance-Free Hinges

Made from steel section, pre-assembled with stainless steel hinge pin and bronze bushing.

- 3.6mm Cast steel
- Smooth operation
- 260° Opening
- No lubrication required
- Robust & durable design
- Stainless steel pin

Typical Applications:

- Side lockers
- Toolboxes
- Acoustic enclosures
- Shelving units
- Cabinets
- Small doors

No. HNVN2939/064ZP Zinc plated
wgt. 0.16kg

- Zinc plated
- 6 x Ø6.4mm Countersunk fixing holes
- Gasket set available – see below

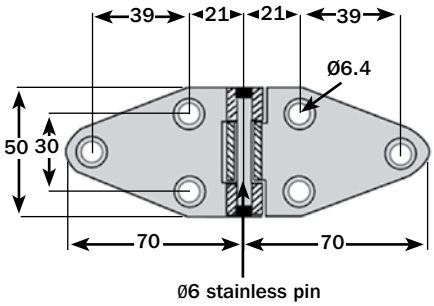

No. HNVN2939/066BLK Black painted
wgt. 0.15kg

No. HNVN2939/066ZP Zinc plated
wgt. 0.15kg

- Zinc plated / Black painted
- 5 x Ø6.4mm Countersunk fixing holes
- Gasket set available – see below

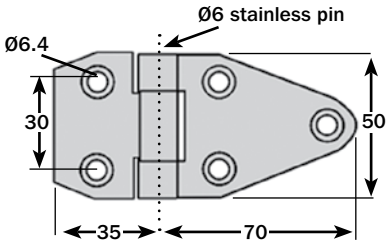

No. HNVN2939/068ZP Zinc plated
wgt. 0.14kg

- Zinc plated
- 4 x Ø6.4mm Countersunk fixing holes
- Gasket set available – see below

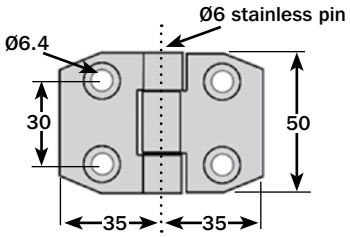

Gasket Set

1mm Natural Rubber

No. HNVN2939/064GAS Suits: **HNVN2939/064ZP**
Size: L70 x W70mm

No. HNVN2939/066GAS Suits: **HNVN2939/066BLK**
Size: L70 x W35mm **HNVN2939/066ZP**

No. HNVN2939/068GAS Suits: **HNVN2939/068ZP**
Size: L35 x W35mm

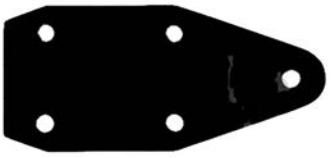

- Protection between hinge & paintwork
- Anti-corrosion advantages
- Vibration control

HINGES

Tail-Lift Hinge
Stainless Steel & Zinc Plated

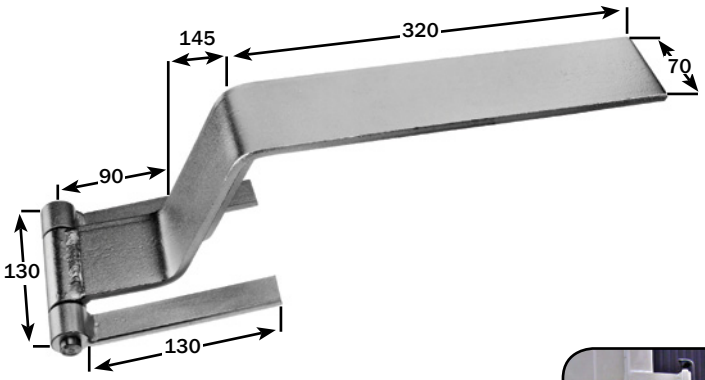

No. HNVN1210/ZP Zinc plated
wgt. 3.32kg

No. HNVN1210/SS Polished stainless steel
wgt. 3.32kg

- Complete with zinc plated brackets & stainless steel pin
- Turns through 270°
- Designed for rear doors where tail-lifts are fitted and doors are recessed into the rear frame

Rigid PVC Hinge
Designed & manufactured for horizontal use only

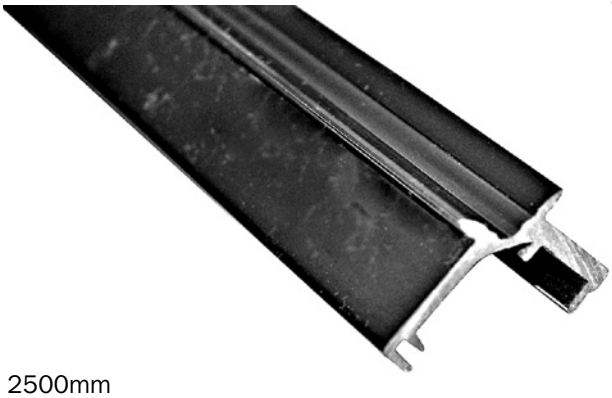

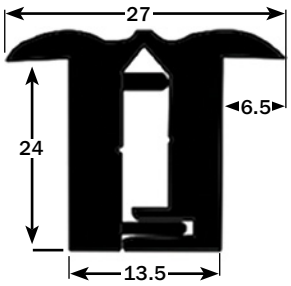

No. HNMSCBF200/25 Length: 2500mm
wgt. 0.90kg

No. HNMSCBF200/30 Length: 3000mm
wgt. 1.10kg

- 180° Opening
- Weatherproof and corrosion resistant
- Low exterior profile
- Concealed fixings
- Easy to fit
- Waterproof seal
- Interlocking profile-security feature
- *Tested to 50,000 fully opening and closing actions (certification available)*

TYPICAL APPLICATIONS INCLUDE:
side flaps, lockers, coaches, horseboxes, recovery vehicles, toolboxes & catering trailers, etc.

Welwyn Garden City tel +44 (0)1707 371161 fax +44 (0)1707 372603
Coseley tel +44 (0)121 520 0100 fax +44 (0)121 522 3889
website www.cbf.uk.com e-mail: sales@cbf.uk.com

HINGES

Poliall Continuous Hinge

TYPICAL APPLICATIONS INCLUDE:
Side doors,
flaps, Lids etc.

Manufactured from 2 anodised aluminium profiles interlinked with black polyurethane allowing a 180° operation and maintenance free usage for many years.

Suitable for both vertical and horizontal use.

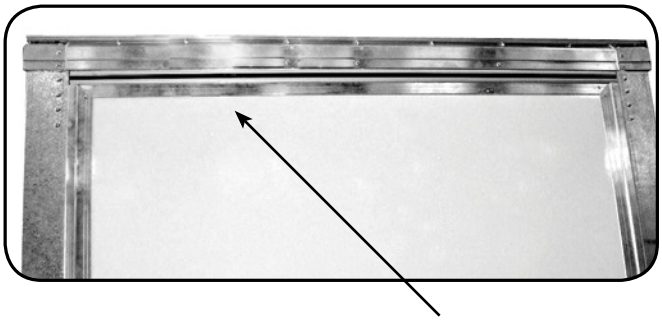

Mounted Hinge

- Available to suit 24mm & 29mm panel thickness
- Pre-drilled with 5mm holes
- Only 4.8mm protrusion
- Extremely robust
- Weather resistant

Smooth Flange

To suit 24mm panel thickness

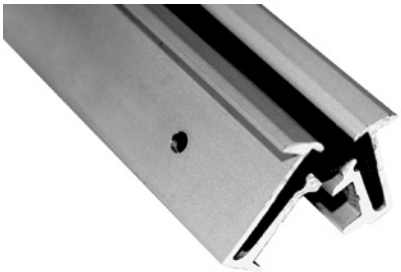

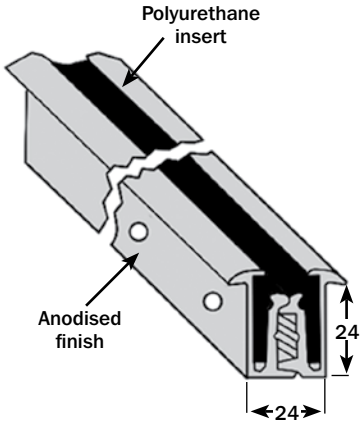

No. HNMS14391/2400
wgt. 3.00kg
- Length: 2400mm x 24mm

No. HNMS14393/2700
wgt. 3.37kg
- Length: 2700mm x 24mm

No. HNMS14395/3000
wgt. 3.75kg
- Length: 3000mm x 24mm

No. HNMS14389/4000
wgt. 5.00kg
- Length: 4000mm x 24mm

Smooth Flange

To suit 29mm panel thickness

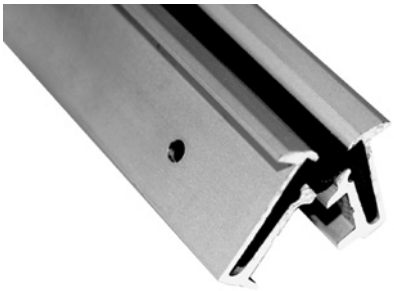

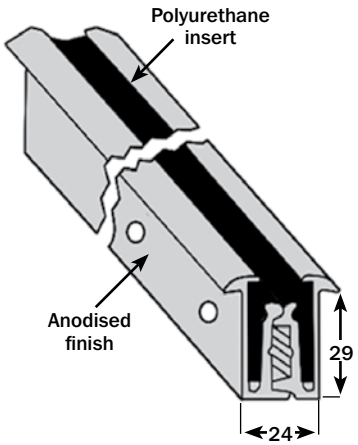

No. HNMS23495/2400
wgt. 3.00kg
- Length: 2400mm x 29mm

No. HNMS23496/2700
wgt. 3.37kg
- Length: 2700mm x 29mm

No. HNMS23497/3000
wgt. 3.75kg
- Length: 3000mm x 29mm

HINGES

Continuous Hinge
Un-drilled – Length 1.83mtr

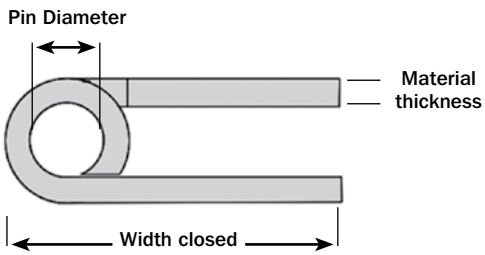

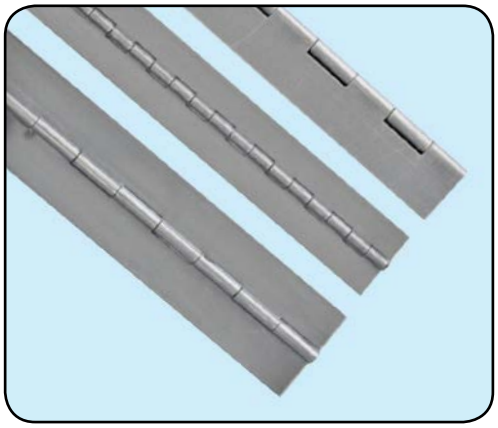

STEEL – SELF COLOUR				
Part No.	Material Thickness	Width Closed	Pin dia. mm	Weight (kg)/ length
HNCN1805S	1.22	22	3.2	0.96
HNCN1810S	1.22	25	4.5	1.25
HNCN1813S	1.22	29	4.5	1.35
HNCN1815S	1.22	32	4.5	1.44
HNCN1816S	1.22	32	6.0	1.68

ZINC PLATED				
Part No.	Material Thickness	Width Closed	Pin dia. mm	Weight (kg)/ length
HNCN1801ZP	1.22	16	3.2	0.71
HNCN1805ZP	1.22	22	3.2	0.96
HNCN1810ZP	1.22	25	4.5	1.25
HNCN1813ZP	1.22	29	4.5	1.35
HNCN1815ZP	1.22	32	4.5	1.44
HNCN1816ZP	1.22	32	6.0	1.68
HNCN1817ZP	1.22	33	6.0	1.79
HNCN1204ZP	2.50	44	6.0	1.99

STAINLESS STEEL				
Part No.	Material Thickness	Width Closed	Pin dia. mm	Weight (kg)/ length
HNCN1606SS	1.50	22	3.2	1.00
HNCN1610SS	1.50	28	3.2	1.39
HNCN1618SS	1.50	33	6.0	1.96
HNCN1813SS	1.22	29	4.5	1.29
HNCN1816SS	1.22	32	6.0	1.63
HNCN1622SS	1.50	36	6.0	2.10
HNCN1626SS	1.50	43	4.5	2.30
ALUMINIUM				
HNCN1816A	1.22	32	6.0	1.54

- Standard pattern
- Can be supplied pre-drilled on request
- Open Flat Type
- Other sizes and specifications available
- All Hinges manufactured to the following tolerance: ±1.0mm

Lift-off Barrel Hinges
Weld-on

- Supplied with grease nipple
- Brass washer
- Manufactured from solid profiles from self coloured steel
- Can be supplied without grease nipple to 'special' order
- Economy models available: flat ended, fixed washer

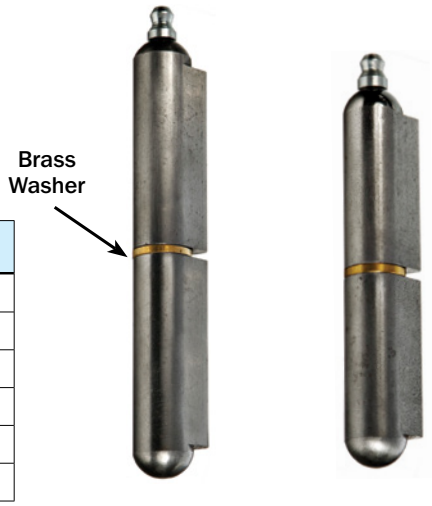

Part No.	Length (mm)	Cross Section (mm)	Pin dia. mm	Weight (kg)/ length
HNMS10/080GN	80	12/14	7	0.07
HNMS10/100GN	100	14/16	8	0.10
HNMS10/120GN	120	16/18	9	0.17
HNMS10/135GN	135	18/22	12	0.30
HNMS10/150GN	150	20/25	13	0.40
HNMS10/180GN*	180	20/25	13	0.48

Special order only

Welwyn Garden City tel +44 (0)1707 371161 fax +44 (0)1707 372603
Coseley tel +44 (0)121 520 0100 fax +44 (0)121 522 3889
website www.cbf.uk.com e-mail: sales@cbf.uk.com

HINGES

Butt Hinges
Self Colour & Zinc Plated

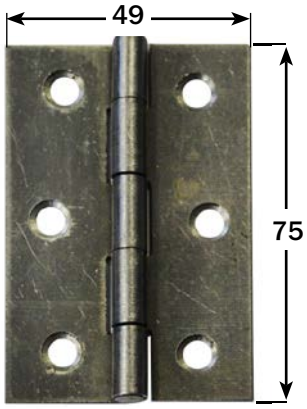

No. HNMS1838/75PR Self colour
wgt. 0.12kg / pair Size: H75 x W49mm

No. HNMS1838/75ZP/PR Zinc plated
wgt. 0.12kg / pair Size: H75 x W49mm

- Sold in pairs
- Mild steel
- 6 x Ø6mm Countersunk fixing holes

Coach Hinges
Self Colour

No. HNMS300/50
wgt. 0.17kg Size: W50 x L90mm

No. HNMS300/75
wgt. 0.24kg Size: W50 x L140mm

No. HNMS300/100
wgt. 0.31kg Size: W50 x L190mm

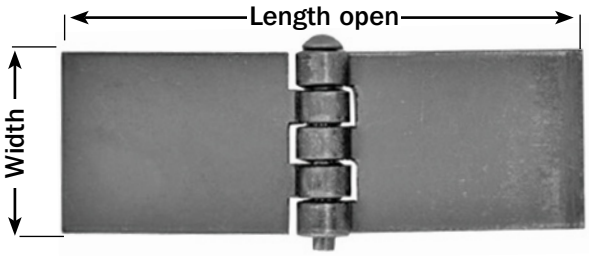

- Sold singly
- Pin: Ø7mm
- Size = Width x Length open

Lift-Off Hinges
3mm Self Colour Mild Steel

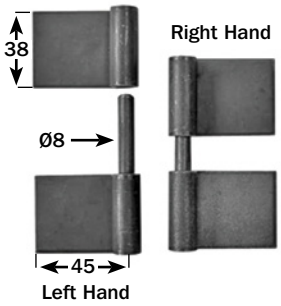

No. HNMS226/LH
wgt. 0.17kg / pair

- Left hand

No. HNMS226/RH
wgt. 0.17kg / pair

- Right hand

Coffin Hinges
3mm Self Colour Mild Steel

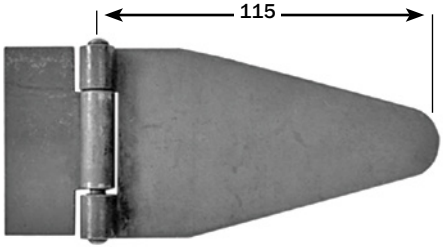

No. HNMS2202/UD Undrilled
wgt. 0.20kg

- Flap: H63 x W115mm
- Bracket: H63 x W30mm

Nylon Hinge
PA Plastic

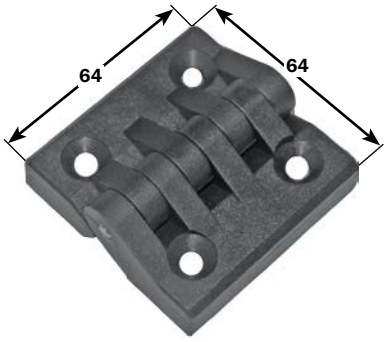

No. HNMS295/64BLK Size: L64 x W64mm
wgt. 0.05kg

- 180° Opening
- 5mm Zinc plated pin
- Robust design
- 4 x Ø6mm Countersunk fixing holes

HINGES – EYEPLATES & BOLTS

Eyebolt
Forged Steel / Self Colour

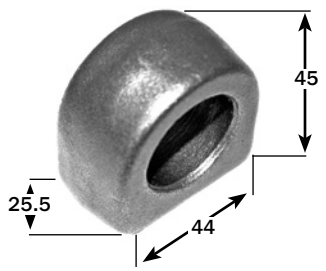

No. AEYE320/20
wgt. 0.27kg

- Drilled for 20mm bar

No. AEYE320/25
wgt. 0.22kg

- Drilled for 25mm bar

Eyebolt
Forged Steel / Zinc Plated

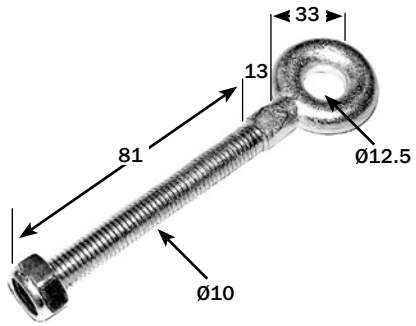

No. AEYE209/12
wgt. 0.11kg

- Eye: Ø12.5mm
- Shank: Ø10mm
- Complete with nyloc nut

Eyebolt
Forged Steel / Zinc Plated

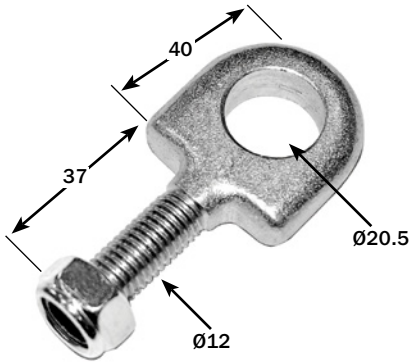

No. AEYE314
wgt. 0.12kg

- Drilled for 20mm bar
- Shank: Ø12mm
- Complete with nyloc nut

Eyeplate
Self Colour & Zinc Plated

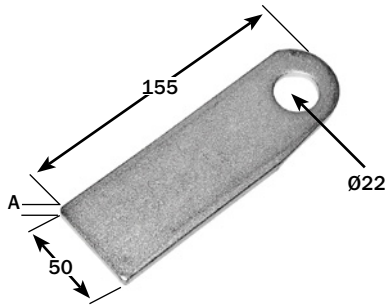

No. AEYE70/05SC Self colour
wgt. 0.28kg A=5mm

No. AEYE70/06SC Self colour
wgt. 0.33kg A=6mm

No. AEYE70/05ZP Zinc plated
wgt. 0.28kg A=5mm

No. AEYE70/06ZP Zinc plated
wgt. 0.33kg A=6mm

Eyeplate
Self Colour & Zinc Plated

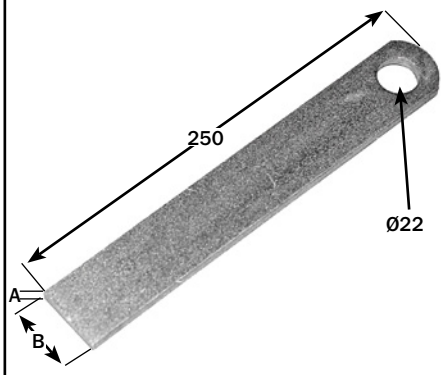

No. AEYE11/06SC Self colour
wgt. 0.34kg A=6mm B=30mm

No. AEYE11/08SC Self colour
wgt. 0.58kg A=8mm B=40mm

No. AEYE11/06ZP Zinc plated
wgt. 0.34kg A=6mm B=30mm

No. AEYE11/08ZP Zinc plated
wgt. 0.58kg A=8mm B=40mm

Eyeplate
Aluminium with Steel Bush

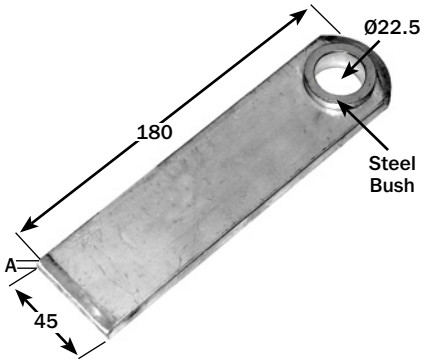

No. AALL3113 Aluminium
wgt. 0.22kg A=9.5mm

- Drilled for 22mm bar
- Steel bush

Welwyn Garden City tel +44 (0)1707 371161 fax +44 (0)1707 372603
Coseley tel +44 (0)121 520 0100 fax +44 (0)121 522 3889
website www.cbf.uk.com e-mail: sales@cbf.uk.com

HINGES & GUDGEONS

Hinge & Gudgeon Set
Medium Duty

No. ALEV909/910ZP Zinc plated
wgt. 0.64kg/set

- Each set includes: 1 x Gudgeon
  1 x Hinge
  1 x Back plate
  4 x Fitting bolts
  2 x Nyloc nuts
  6 x Flat washers
  2 x Spring washers
- Suits most aluminium hollow plank sections

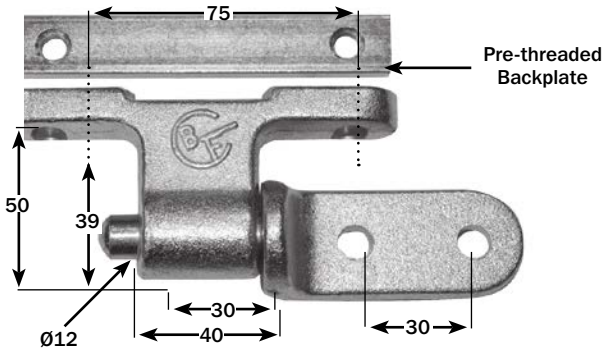

Hinge & Gudgeon Set
Heavy Duty

No. ALEV906/907ZP Zinc plated
wgt. 0.70kg/set

- Each set includes: 1 x Gudgeon
  1 x Hinge
  1 x Back plate
  4 x Fitting bolts
  2 x Nyloc nuts
  4 x Flat washers
  2 x Spring washers
- Suits most aluminium hollow plank sections

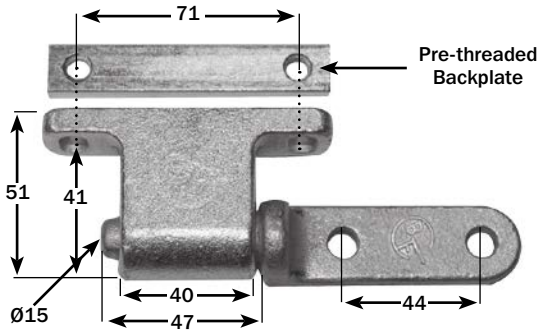

Safety Sideboard Hinge Set
Heavy Duty

No. ATBF6540 Self colour / Galvanized
wgt. 0.29kg/set

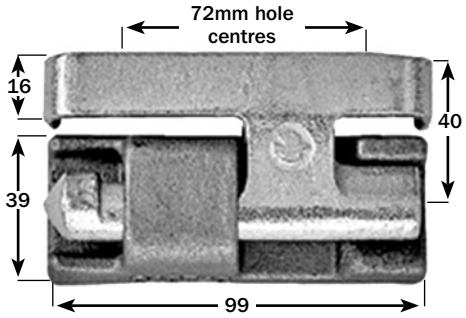

- Hinge: Weld-on / Self colour
- Hinge hook: Bolt-on / Galvanized
- Secures steel / aluminium sideboards from unintentional un-hinging
- Customs approved

IMPORTANT

Zinc plating is only classed as a 'sacrificial' coating
(gives itself up to the corrosive media).
A protective barrier (i.e. paint) is recommended to protect against moisture.

CBF cannot be held responsible for the effects of corrosion on zinc plated parts.

HINGES & GUDGEONS

Straight Hinges
Self Colour & Zinc Plated

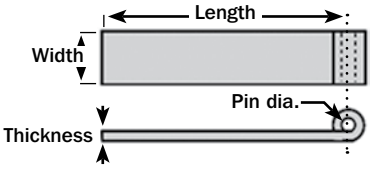

SELF COLOUR					
Part No.	Length (mm)	Width (mm)	Thickness (mm)	Hole dia. (mm)	Weight (kg)
AHNG4/18306SC	450	30	6	12.5	0.66
AHNG4/18408SC	450	40	8	12.5	1.29
AHNG4/20408SC	500	40	8	12.5	1.33
AHNG4/24408SC	600	40	8	12.5	1.72
AHNG4/30408SC	760	40	8	12.5	1.97
ZINC PLATED					
AHNG4/18306ZP	450	30	6	12.5	0.66
AHNG4/18408ZP	450	40	8	12.5	1.29
AHNG4/24408ZP	600	40	8	12.5	1.72
AHNG4/30408ZP	760	40	8	12.5	1.97

See page 130 for gudgeon pins

Short Hinges
Self Colour & Zinc Plated

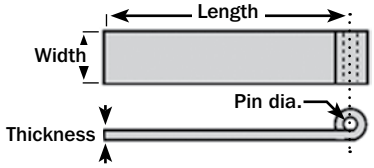

SELF COLOUR					
Part No.	Length (mm)	Width (mm)	Thickness (mm)	Hole dia. (mm)	Weight (kg)
AHNG2/306SC	50	30	6	12.5	0.14
AHNG2/408SC	50	40	8	12.5	0.25
AHNG2/70408SC	70	40	8	12.5	0.27
AHNG121/306SC	150	30	6	12.5	0.27
AHNG121/408SC	150	40	8	12.5	0.51
AHNG121/40816SC	150	40	8	16.5	0.51
ZINC PLATED					
AHNG121/306ZP	150	30	6	12.5	0.27
AHNG121/408ZP	150	40	8	12.5	0.51

See page 130 for gudgeon pins

Welwyn Garden City tel +44 (0)1707 371161 fax +44 (0)1707 372603
Coseley tel +44 (0)121 520 0100 fax +44 (0)121 522 3889
website www.cbf.uk.com e-mail: sales@cbf.uk.com

HINGES & GUDGEONS

Hinge, Weld-on
Aluminium with Steel Bush

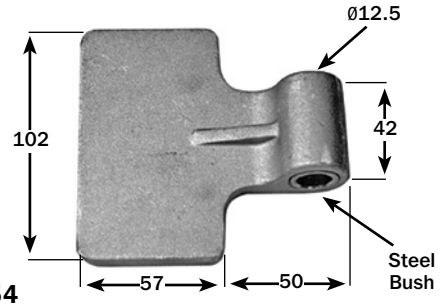

No. AALL1054
wgt. 0.26kg
- To suit 12mm gudgeons

TIR Hinge Block, Weld-on
Self Colour

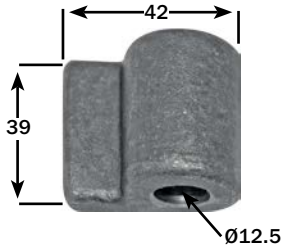

No. AHNG713
wgt. 0.19kg
- Ø12.5mm Eye

Hinge, Weld-on
Self Colour

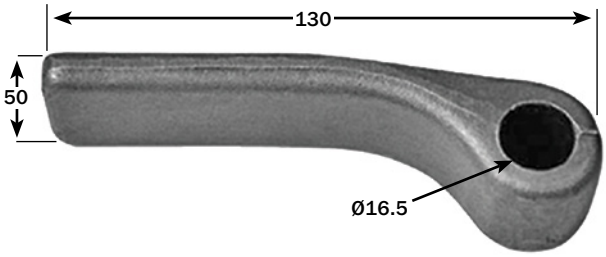

No. AHNG324
wgt. 0.44kg
- Ø16.5mm Eye

Hinge, Weld-on
Self Colour

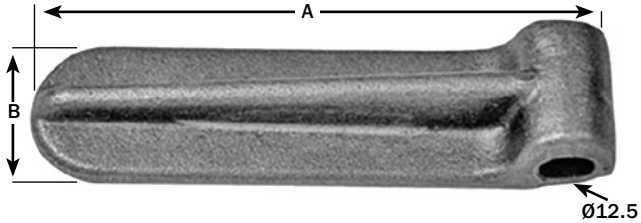

No. AHNG120 Ø12.5mm Eye A=146 B=40mm
wgt. 0.45kg

No. AHNG120A Ø12.5mm Eye A=200 B=40mm
wgt. 0.57kg

Hinge, Weld-on
Self Colour

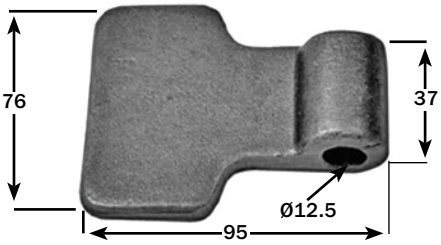

No. AHNG119/12
wgt. 0.53kg
- Ø12.5mm Eye

Hinge, Weld-on
Self Colour

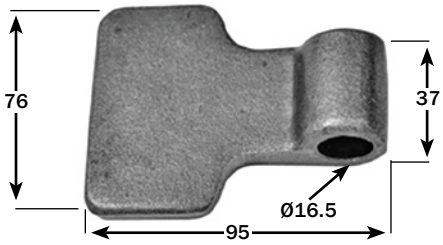

No. AHNG119/16
wgt. 0.50kg
- Ø16.5mm Eye

Hinge Tubes
Self Colour / Mild Steel

No. AMSC330/12 A=Ø12 B=38 C=Ø25mm
wgt. 0.11kg

No. AMSC330/16 A=Ø16 B=38 C=Ø32mm
wgt. 0.13kg

HINGES & GUDGEONS

Gudgeon, Bolt-on
Heavy-Duty, Self Colour

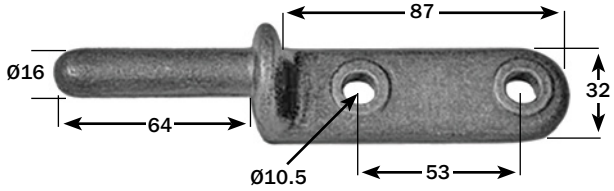

No. AROP22/16
wgt. 0.28kg

- Self Colour
- Heavy-Duty

Gudgeon, Bolt-on
Self Colour & Zinc Plated

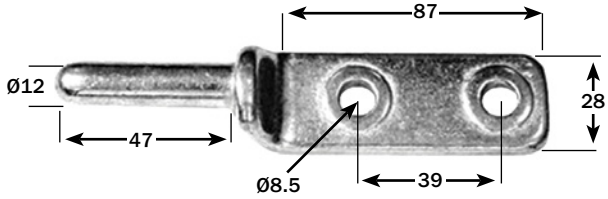

No. AROP22/STSC Self colour
wgt. 0.17kg

No. AROP22/STZP Zinc plated
wgt. 0.17kg

- Medium duty

Gudgeon, Bolt-on
Long Peg, Self Colour

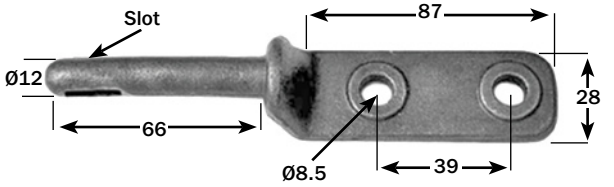

No. AROP22/LP Long peg, unslotted
wgt. 0.18kg

No. AROP22/LPS Long peg, slotted
wgt. 0.17kg Slot: L16 x W5mm

- Self colour
- Medium duty

Gudgeon, Weld-on
Standard, Self Colour

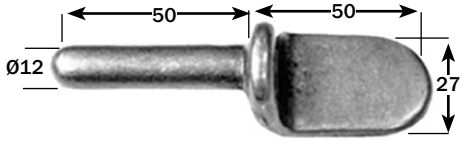

No. AROP21/ST
wgt. 0.14kg

- Self colour
- Medium duty

Gudgeon, Weld-on
Heavy-Duty, Self Colour

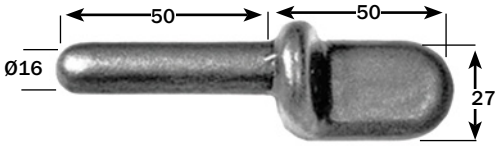

No. AROP21/16
wgt. 0.20kg

- Self colour
- Heavy-Duty

Gudgeon, Weld-on
Long Peg, Self Colour

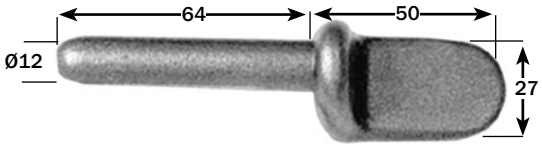

No. AROP21/LP Long peg, unslotted
wgt. 0.15kg

No. AROP21/LPS Long peg, slotted
wgt. 0.14kg Slot: L16 x W5mm

- Self colour
- Medium duty

Gudgeon, Weld-on
Long Peg, Self Colour

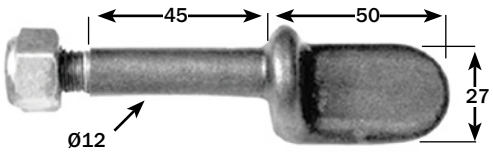

No. AROP21/LPN Long peg
wgt. 0.15kg

- Self colour
- Medium duty
- Supplied complete with threaded peg & nyloc nut

Welwyn Garden City tel +44 (0)1707 371161 fax +44 (0)1707 372603
Coseley tel +44 (0)121 520 0100 fax +44 (0)121 522 3889
website www.cbf.uk.com e-mail: sales@cbf.uk.com

LASHING RAIL

Hardwood Tie Rail
'Keruing'

No. MISC6315/1213
wgt. 0.70kg/metre

- Durable 'Keruing' hardwood (750kg/m3)
- Colour: Pink / Brown
- Size: W63 x 15mm thick
- 'Pencil Round Edges'
- Available in mixed lengths: 3.6 – 3.9 Metres (12' – 13')

Aluminium Tie Rail
Padding Profile

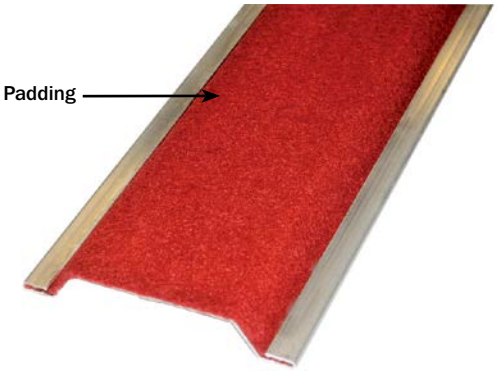

No. MISC14926/4000AL
wgt. 4.10kg

- Size: L4000 x W149 x D22mm
- 2mm Aluminium extrusion complete with red carpet style padding
- Ideal for transporting fragile goods

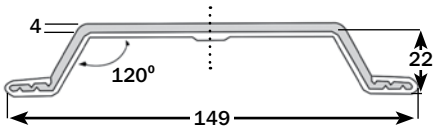

Cushioned Tie Rail
Black PVC Vinyl

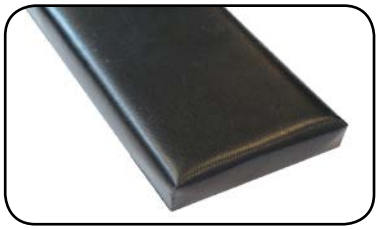

No. MISC7544/CRR Size: L2440 x W75 x D44mm
wgt. 2.50kg

No. MISC15044/CRR Size: L2440 x W150 x D44mm
wgt. 5.00kg

- Ideal to use when transporting fragile goods
- Heavy-duty PVC vinyl outer layer
- Birch plywood core
- Fixing plates not included
- Other sizes available upon request

LASHING RINGS

Lashing Ring – Recessed
Zinc Plated

No. AROP410
wgt. 0.38kg

- Size: W95 x L100mm
- Recess: W75 x L76 x D27mm
- Permissible Tensile Load: 500kg (0.5T)
- High-Tensile bolts required in all applications
- Test certification available upon request
- 4 x Ø7.3mm Fixing holes

Lashing Ring – Recessed
Zinc Plated

No. AROP410/SPR
wgt. 0.39kg

- Size: W95 x L100mm
- Recess: W75 x L76 x D27mm
- Complete with spring loaded ring
- Permissible Tensile Load: 500kg (0.5T)
- High-Tensile bolts required in all applications
- Test certification available upon request
- 4 x Ø7.3mm Fixing holes

Lashing Ring – Recessed
Zinc Plated

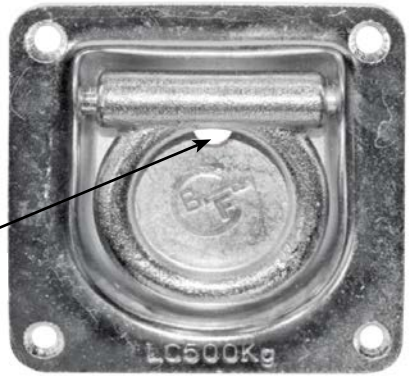

No. AROP510/DR
wgt. 0.44kg

- Size: W105 x L105mm
- Recess: W79 x L85 x D27mm
- Drainage hole
- Permissible Tensile Load: 500kg (0.5T)
- High-Tensile bolts required in all applications
- Test certification available upon request
- 4 x Ø7.3mm Fixing holes

Lashing Ring – Recessed
Zinc Plated

No. AROP430
wgt. 0.54kg

- Size: W125 x L150mm
- Recess: W70 x L134 x D21mm
- Complete with spring loaded ring
- Permissible Tensile Load: 500kg (0.5T)
- High-Tensile bolts required in all applications
- Test certification available upon request
- 6 x Ø7.3mm Fixing holes

Welwyn Garden City tel +44 (0)1707 371161 fax +44 (0)1707 372603
Coseley tel +44 (0)121 520 0100 fax +44 (0)121 522 3889
website www.cbf.uk.com e-mail: sales@cbf.uk.com

LASHING RINGS

Lashing Ring – Pivotal / Recessed
Galvanized

Complete Unit

No. AROP340
wgt. 0.83kg

- Complete unit includes: 1 x Swivel ring
  1 x Pan
  2 x Seal plates
  1 x Rubber seal
- Size: Ø152mm
- Recess: Ø140 x D18mm
- Universally jointed to withstand loads enforced in any direction
- Permissible Tensile Load: 2000kg (2.0T)
- High-Tensile bolts required in all applications
- Test certification available upon request

No. AROP340/R Swivel ring only
wgt. 0.38kg Galvanized

Swivel Ring

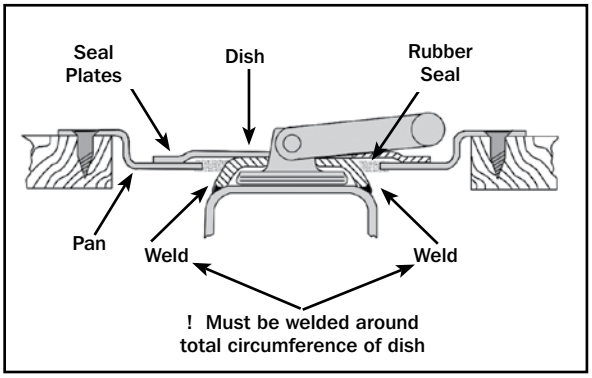

FITTING INSTRUCTIONS

1. Weld pivotal ring sub-assembly to trailer cross member. Weld must be totally around retainer dish
2. Router hole in timber floor to suit pan
3. Fit rubber seal over ring, then place pan over ring and fit rubber seal into hole in pan
4. Screw pan to timber floor
5. Place seal plates around ring, covering rubber seal and tack weld at 4 equal positions around outside diameter of seal plate.

Lashing Ring – Recessed
Galvanized

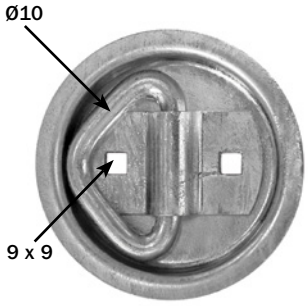

No. AROP665/GV
wgt. 0.31kg

- Complete unit includes: 1 x Ring
  1 x Pan
  1 x Cleat
- Size: Ø103 x D18mm
- Recess: Ø88 x D16mm
- Fully recessed, ideal for cross member attachment
- Permissible Tensile Load: 500kg (0.5T)
- High-Tensile bolts required in all applications
- Test certification available upon request

Lashing Ring – Recessed
Self Colour

No. AROP9096/2500SC
wgt. 0.89kg

- Size: W96 x L90 x D28mm
- Permissible Tensile Load: 2500kg (2.5T)
- Drain hole in base
- Weld-on
- Test certification available upon request

Lashing Ring – Recessed
Zinc Plated

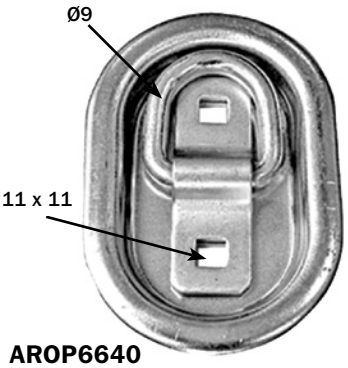

No. AROP6640
wgt. 0.54kg

- Complete unit includes:
  1 x Ring
  1 x Pan
  1 x Cleat
  1 x Back plate
- Size: W100 x L145mm
- Recess: W76 x L120 x D9mm
- Permissible Tensile Load: 750kg (0.75T)
- High-Tensile bolts required in all applications
- Test certification available upon request

LASHING RINGS

Lashing Ring
No Plate / Weld-on

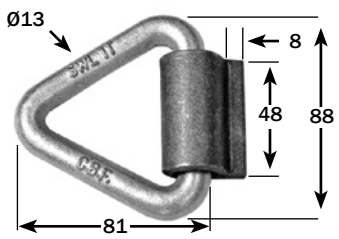

No. AROP357/NP
wgt. 0.38kg

- Bracket: Self colour
- Ring: Zinc plated
- Permissible Tensile Load: 1000kg (1.0T)

Lashing Ring
Short Plate / Weld-on

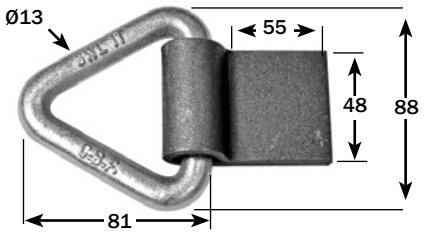

No. AROP357/SP
wgt. 0.55kg

- Bracket: Self colour
- Ring: Zinc plated
- Permissible Tensile Load: 1000kg (1.0T)

Lashing Ring
Long Plate / Weld-on

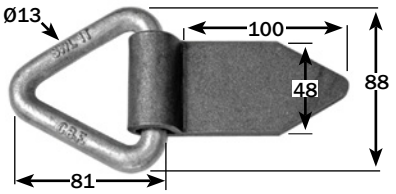

No. AROP357/LP
wgt. 0.65kg

- Bracket: Self colour
- Ring: Zinc plated
- Permissible Tensile Load: 1000kg (1.0T)

Lashing Ring
Long Plate / Bolt-on

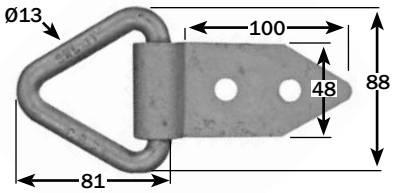

No. AROP357/LP/DGV
wgt. 0.64kg

- Bracket: Galvanized
- Ring: Galvanized
- 2 x Ø10.5mm Fixing holes
- Permissible Tensile Load: 1000kg (1.0T)

Lashing Ring & Cleat
Bolt-on, Galvanized

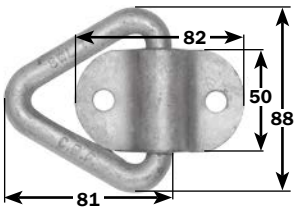

No. AROP357/BOGV
wgt. 0.37kg

- Bracket: Galvanized
- Ring: Galvanized
- 2 x Ø10.5mm Fixing holes
- Permissible Tensile Load: 1000kg (1.0T)

Lashing Ring
Ring Only

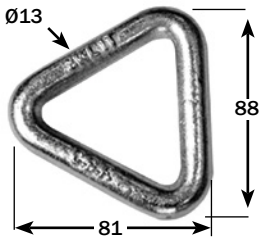

No. AROP357/R
wgt. 0.24kg

- Ring: Zinc plated
- Permissible Tensile Load: 1000kg (1.0T)

Welwyn Garden City tel +44 (0)1707 371161 fax +44 (0)1707 372603
Coseley tel +44 (0)121 520 0100 fax +44 (0)121 522 3889
website www.cbf.uk.com e-mail: sales@cbf.uk.com

LASHING RINGS

Underfloor Lashing Link
Zinc Plated / Gold Passivation Finish

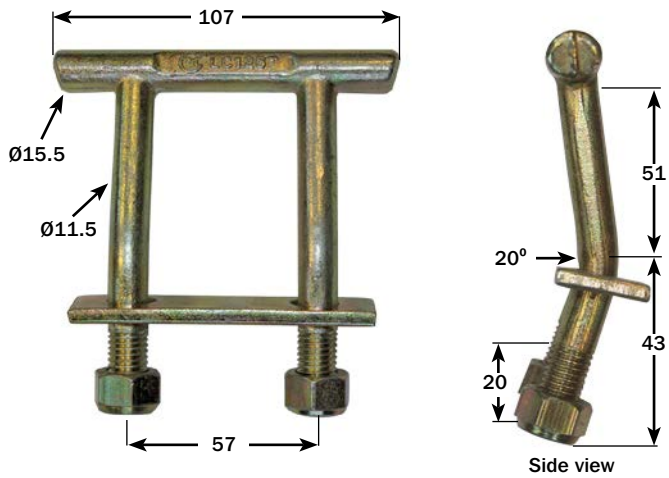

No. AROP2525
wgt. 0.41kg

- Supplied complete with nyloc nuts & backplate
- Suits both rave & single claw hooks
- Permissible Tensile Load: 1250kg (1.25T)
- Test certification available upon request

Lashing Ring – Recessed
Galvanized

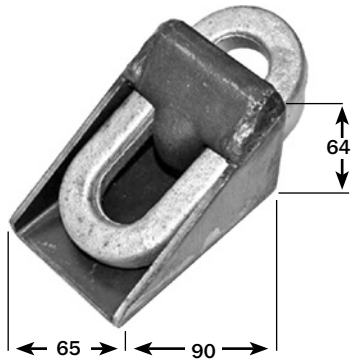

No. AROPCBF250
wgt. 1.08kg

- Bracket: Self colour
- Ring: 15 x 15mm Galvanized
- Permissible Tensile Load: 3500kg (3.5T)
- Test certification available upon request

Lashing Ring & Cleat
Bolt-on, Zinc Plated

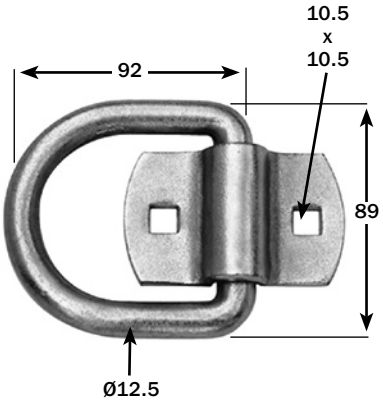

No. AROP56/13
wgt. 0.42kg

- Bracket: Zinc plated
- Ring: Zinc plated
- Permissible Tensile Load: 1500kg (1.5T)

Pan Fitting with 'D' Ring
Zinc Plated / Gold Passivate

No. AROP7190
wgt. 0.08kg

- Size: Ø102mm
- Plate trim: Polyurethane
- Low profile mounting in trucks or cargo containers
- Ring is designed to stay centred

No. AROP7190/R
wgt. 0.08kg

- Ring only

Pan Fitting with 'D' Ring
Stainless Steel

No. AROP7190/SS
wgt. 0.08kg

- Size: Ø102mm
- Plate trim: Polyurethane
- Low profile mounting in trucks or cargo containers
- Ring is designed to stay centred

No. AROP7190/RSS
wgt. 0.08kg

- Ring only

LASHING RINGS

Lashing Ring
Stainless Steel & Zinc Plated

No. AROP3473 Zinc plated
wgt. 0.17kg

No. AROP3473/SS Stainless steel
wgt. 0.17kg

- Plate: L50 x W40mm
- Ring: Ø65 x Ø8mm
- 4 x Ø5mm Fixing holes

Lashing Ring – Recessed
Zinc Plated

No. AROP4574
wgt. 0.12kg

- Plate: L74 x W45mm
- Ring: Ø70 x Ø7mm
- 4 x Ø5mm Fixing holes

Rocking Staple
Zinc Plated

No. AROP3309/55
wgt. 0.04kg

- Ring: L55 x W34 x Ø6mm
- Staple: L50 x W20
- 2 x Ø6mm Fixing holes

Staple
Cast Steel

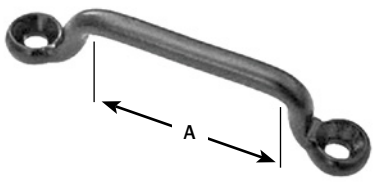

No. MISC69/30
wgt. 0.02kg A=30mm
No. MISC69/40
wgt. 0.03kg A=40mm
No. MISC69/50
wgt. 0.04kg A=50mm

- Black epoxy coated
- Ø5.5mm Fixing holes

Welded Ring
Zinc Plated

No. CARG15013/10
wgt. 0.10kg

- Material: Ø8.3mm
- Ring ID: Ø75mm
- Suits curtain sided centre pole

Welded Ring
Self Colour

No. AMSC279/50
wgt. 0.10kg

- Material: Ø9.5mm
- Ring ID: Ø50mm

Welwyn Garden City tel +44 (0)1707 371161 fax +44 (0)1707 372603
Coseley tel +44 (0)121 520 0100 fax +44 (0)121 522 3889
website www.cbf.uk.com e-mail: sales@cbf.uk.com

LASHING RINGS

Lashing Link
High Tensile Steel / Yellow Painted Ring

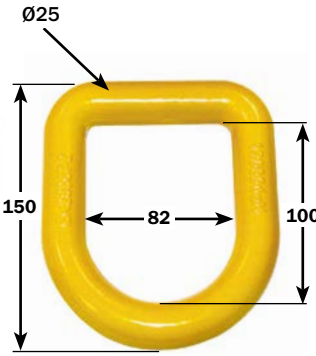

AFER25/12000/YEL

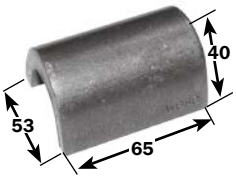

AFER25/12000/WOSC

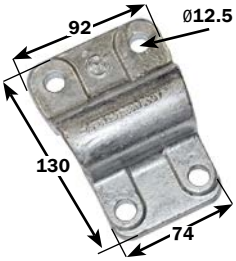

AFER25/12000/BOGV

No. AFER25/12000/YEL Lashing link ring, yellow painted
wgt. 1.44kg

Cleat Options

No. AFER25/12000/BOGV Lashing link cleat, bolt-on, galvanized
wgt. 0.97kg

No. AFER25/12000/WOSC Lashing link cleat, weld-on, self colour
wgt. 0.45kg

- Conforms to **EN29367-2**, lashing & securing arrangements on road vehicles for transportation on RO/RO ships (general requirements)
- Permissible Tensile Load: 12000kg (12.0T)
- Test certification available upon request
- High-Tensile bolts required in all applications (AFER25/12000/BOGV)

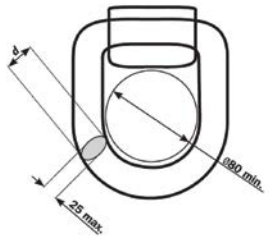

EN29367-2 CRITERIA
abbreviated version

Each lashing point shall allow the free passage inside it of a circle of at least Ø80mm, but the aperture need not be circular. The thickness of the lashing point material shall allow engagement of a hook of at least 25mm opening. For hinged or swivelling lashing points, dimension ***d*** may exceed 25mm.

The value of the test force to be used is 120kN.

Lashing Link
High Tensile Steel

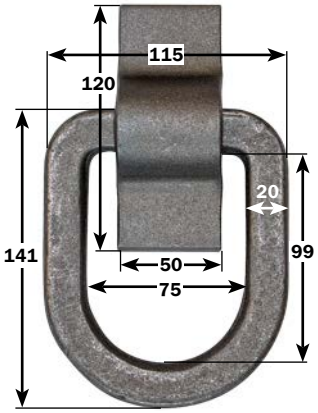

No. AFER22/5000SC
wgt. 1.20kg

- Material: W20 x D23mm
- Self colour

No. AFER22/CLEAT
wgt. 0.50kg

- Self colour
- Permissible Tensile Load: 5000kg (5.0T)
- Test certification available upon request

Lashing Link
High Tensile Steel

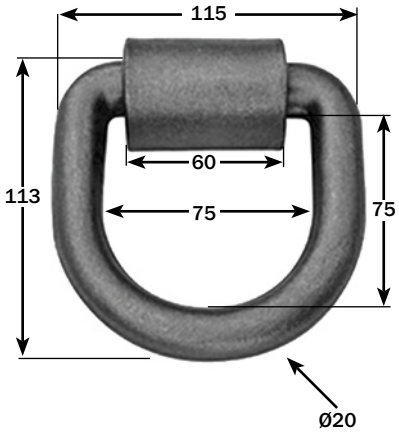

No. AFER20/2000SC
wgt. 1.15kg

- Material: Ø20mm
- Self colour
- Supplied with weld-on cleat
- Permissible Tensile Load: 2000kg (2.0T)
- Test certification available upon request

Lashing Link
High Tensile Steel

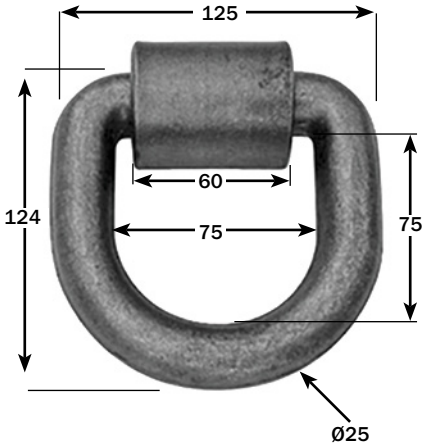

No. AFER25/8000SC
wgt. 1.59kg

- Material: Ø25mm
- Self colour
- Supplied with weld-on cleat
- Permissible Tensile Load: 8000kg (8.0T)
- Test certification available upon request

Welwyn Garden City tel +44 (0)1707 371161 fax +44 (0)1707 372603
Coseley tel +44 (0)121 520 0100 fax +44 (0)121 522 3889
website www.cbf.uk.com e-mail: sales@cbf.uk.com

LOAD RESTRAINT

Internal Strap Assemblies
Box Vehicles

Safe Load Capacity: 350kg
Ultimate Load Capacity: 700kg

- Zinc plated overcentre buckle
- Claw hook ends
- Manufactured in accordance with BS EN12195-2:2001
- Can be manufactured to any length
- Alternative end fittings available upon request

Part No.	Working Length (mtr)	Buckle	Webbing Width (mm)	End Fitting	Weight (kg)
CARG3309B	2.75	Overcentre	50	Claw Hook / Claw Hook	0.59
CARG3312B	3.66	Overcentre	50	Claw Hook / Claw Hook	0.62
CARG3314B	4.20	Overcentre	50	Claw Hook / Claw Hook	0.68

Internal Strap Assemblies
Curtainsider Vehicles

Safe Load Capacity: 350kg
Ultimate Load Capacity: 700kg

- Zinc plated overcentre buckle
- Rave hook end
- Manufactured in accordance with BS EN12195-2:2001
- Can be manufactured to any length
- Alternative end fittings available upon request

CARG3314SK

CARG3314RK

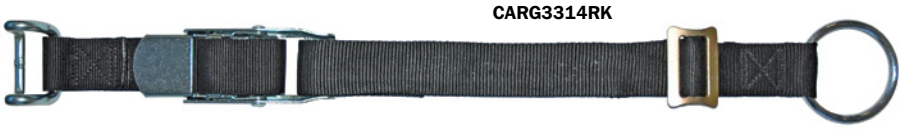

Part No.	Working Length (mtr)	Buckle	Webbing Width (mm)	Top End Fitting	Weight (kg)
CARG3314SK	4.25	Overcentre	50	Snap Hook	0.72
CARG3314RK	4.25	Overcentre	50	Ring	0.72

Ratchet Strap – Medium Duty
Claw Hook Ends

No. CARG1514B 4.2mtr
wgt. 0.93kg
Safe Load Capacity: 1000kg
- 50mm Webbing

Ultimate Load Capacity: 2000kg
- Manufactured in accordance with BS EN12195-2:2001

Ratchet Strap – Heavy Duty
Claw Hook Ends

No. CARG2624V 7.5mtr
wgt. 2.34kg
No. CARG2630V 9.0mtr
wgt. 2.53kg
Safe Load Capacity: 2000kg
- 50mm Webbing

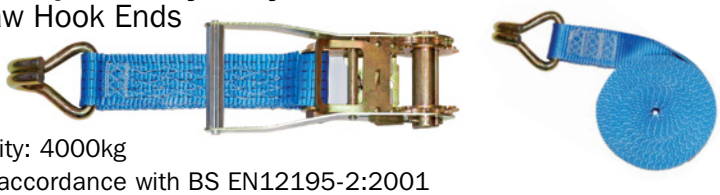

Ultimate Load Capacity: 4000kg
- Manufactured in accordance with BS EN12195-2:2001

Ratchet Strap – Heavy Duty
Rave Hook Ends

No. CARG2624H 7.5mtr
wgt. 2.34kg
No. CARG2630H 9.0mtr
wgt. 2.53kg
Safe Load Capacity: 2000kg
- 50mm Webbing

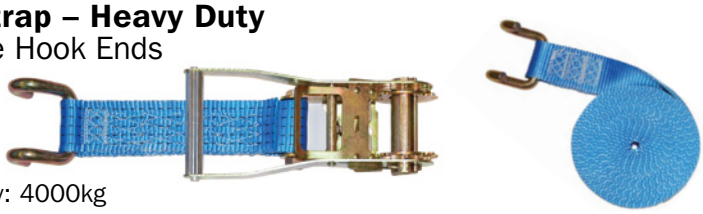

Ultimate Load Capacity: 4000kg
- Manufactured in accordance with BS EN12195-2:2001

Bespoke Service

A bespoke service is available, meaning we can produce alternative units to suit customer specific requirements.
Webbing can also be printed with your company name/logo.
Subject to minimum order quantity.
Please contact us for more information.

Welwyn Garden City tel +44 (0)1707 371161 fax +44 (0)1707 372603
Coseley tel +44 (0)121 520 0100 fax +44 (0)121 522 3889
website www.cbf.uk.com e-mail: sales@cbf.uk.com

LOAD RESTRAINT

Side Curtain Strap

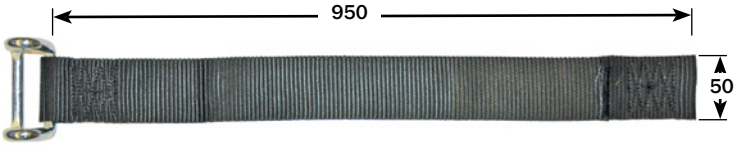

No. CARG0503K Tension end only
wgt. 0.17kg

- Closed rave hook

Side Curtain Strap

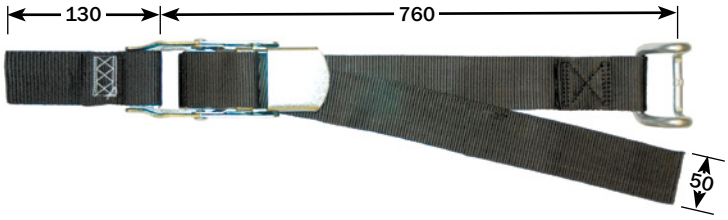

No. CARG8402K Replacement strap
wgt. 0.49kg

- Closed rave hook
- Overcentre buckle, zinc plated

Rope Tie-Off

No. CARG1809C Rope Tie-Off
wgt. 0.18kg Webbing: L73 x W45mm

- Suits universal & E tracks – see page 140

Webbing

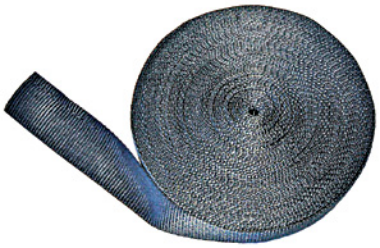

No. CARG50 50mm Wide
wgt. 4.61kg / 100mtr

Safe Load Capacity: 350kg
Ultimate Load Capacity: 700kg

- Sold per metre
- Other sizes available

Duplex Lifting Slings

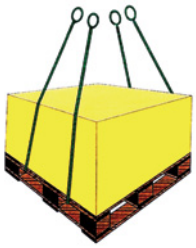

Manufactured from 100% high tenacity polyester fibre.
All slings are clearly labelled with load capacity and have looped eyes at each end for safe lifting points

- Certificate of conformity supplied with each sling

Part No.	Colour Code	Length (mm)				
CARGLSD2T/3MG	Green	3000	2000kg	1600kg	4000kg	2800kg
CARGLSD2T/4MG	Green	4000	2000kg	1600kg	4000kg	2800kg
CARGLSD2T/5MG	Green	5000	2000kg	1600kg	4000kg	2800kg
CARGLSD3T/3MY	Yellow	3000	3000kg	2400kg	6000kg	4200kg
CARGLSD3T/4MY	Yellow	4000	3000kg	2400kg	6000kg	4200kg
CARGLSD3T/5MY	Yellow	5000	3000kg	2400kg	6000kg	4200kg

LOAD RESTRAINT

Standard Track
Galvanized

No. CARG1805
wgt. 2.40kg

- Size: L3050 x W66 x D14mm
- Gauge: 1.50mm
- Holes: Ø25mm
- Ø4.2mm Fixing holes
- Fits vertically or horizontally

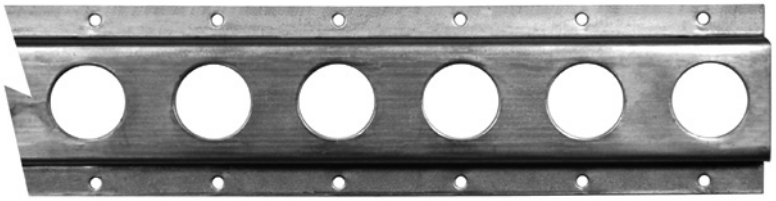

Heavy-Duty Track
Zinc Plated

No. CARG1806
wgt. 4.10kg

- Size: L3050 x W82 x D15mm
- Gauge: 2.50mm
- Holes: Ø25mm
- Ø6.5mm Fixing holes
- Fits vertically or horizontally with notch upwards
- For **CARG1806/EC** end caps – see page 141

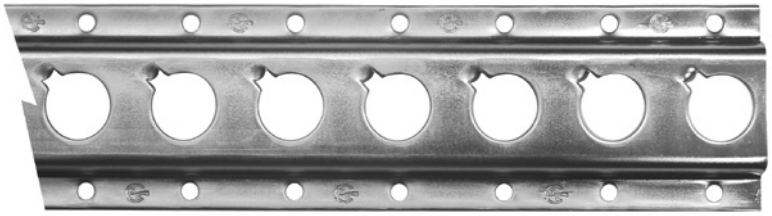

Heavy-Duty Track
Stainless steel

No. CARG1806/S
wgt. 3.30kg

- Size: L3050 x W80 x D14mm
- Gauge: 2.00mm
- Holes: Ø25mm
- Ø6.5mm Fixing holes
- Fits vertically or horizontally with drainage hole down
- For **CARG1806/EC** end caps – see page 141

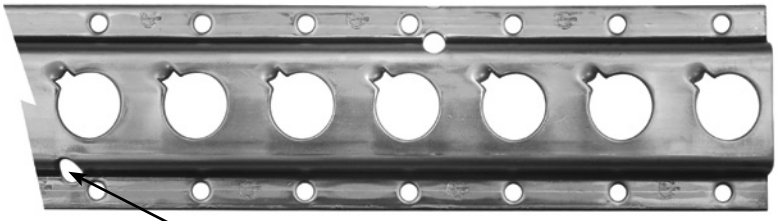

Universal Track
Zinc Plated / Gold Passivated

No. CARGSE1065
wgt. 6.80kg

- Size: L3050 x W132 x D13mm
- Gauge: 2.50mm
- Holes: Ø25mm
- Slots: H61 x W20mm
- Ø5.2mm Fixing holes
- Fits horizontally
- For **CARGSE1065/EC** end caps – see page 141

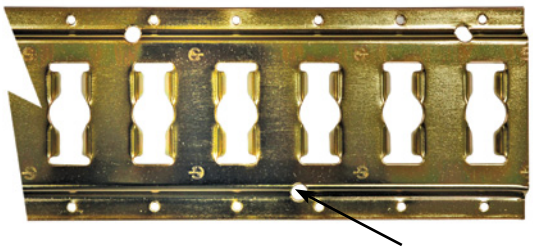

Lashing Rail Track
Aluminium Extrusion / PVC Covered

No. CARG1990/3000/AL
wgt. 4.09kg

- Size: L3000 x W66 x D23mm
- Gauge: 2.00mm Aluminium extrusion
- Pin centres: 120mm
- Ø10mm Fixing holes
- Fits horizontally
- Other lengths available upon request
- Ideal for furniture / removal vehicles
- Suits: **CARG3309B**, **CARG3312B** & **CARG3314B** straps, see page 138

Welwyn Garden City tel +44 (0)1707 371161 fax +44 (0)1707 372603
Coseley tel +44 (0)121 520 0100 fax +44 (0)121 522 3889
website www.cbf.uk.com e-mail: sales@cbf.uk.com

LOAD RESTRAINT

Captive Track
Aluminium

No. CARGCBF34A
wgt. 2.50kg

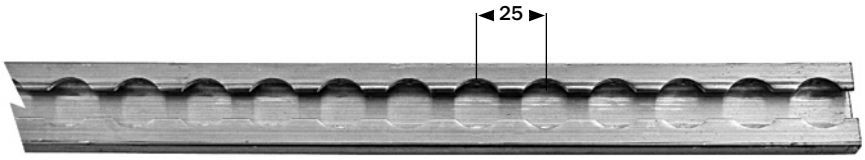

- Size: L3000 x W34 x D8.5mm
- Gauge: 2.50mm
- Holes: Ø20mm
- Hole centres: 25mm
- For horizontal wall mounting or floor fixing

Captive Track
Aluminium

No. CARGCBF62A
wgt. 2.06kg

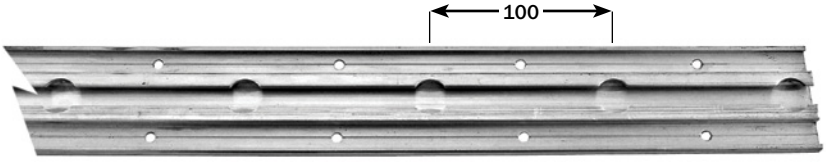

- Size: L3000 x W62 x D9.0mm
- Gauge: 2.50mm
- Holes: Ø20mm
- Hole centres: 100mm
- Ø6mm Fixing holes
- For horizontal wall mounting or floor fixing

Single Stud Fitting
Zinc Plated

No. REST25STF/18
wgt. 0.08kg

- Ring: Ø5 x 39mm O/D
- Overall height: 61mm
- Suits **CARGCBF34A** track – see above

Double Stud Fitting
Zinc Plated / Gold Passivated

No. REST50CDSR/10
wgt. 0.15kg

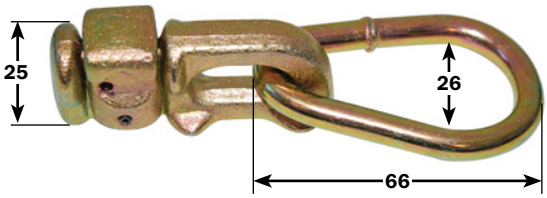

- Ring: Ø7mm
- Overall depth: 25mm
- Cannot be removed from track after installation
- Suits **CARGCBF62A** track – see above

Plastic End Cap

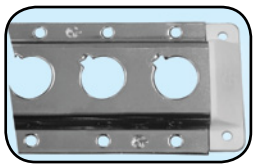

No. CARG1806/EC
wgt. 0.0001kg

- White plastic
- Suits: **CARG1806** & **CARG1806/S**

Plastic End Cap

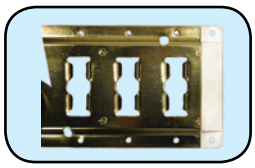

No. CARGSE1065/EC
wgt. 0.0002kg

- White plastic
- Suits: **CARGSE1065**

Welwyn Garden City tel +44 (0)1707 371161 fax +44 (0)1707 372603
Coseley tel +44 (0)121 520 0100 fax +44 (0)121 522 3889
website www.cbf.uk.com e-mail: sales@cbf.uk.com

LOAD RESTRAINT

Load Bar Cups
Zinc Plated

Heavy-Duty load bar cups are designed to be used in conjunction with the load bars listed on page 143.
The load bar system is designed to provide load control in rigid sided vehicles, ie GRP boxes, trailers etc.

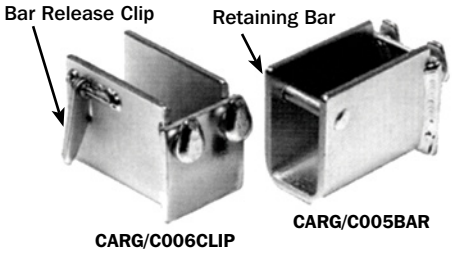

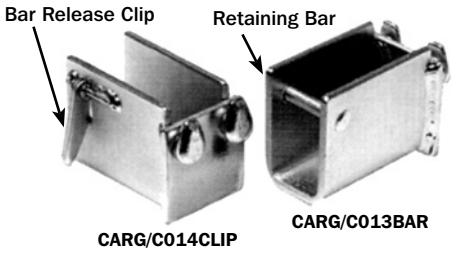

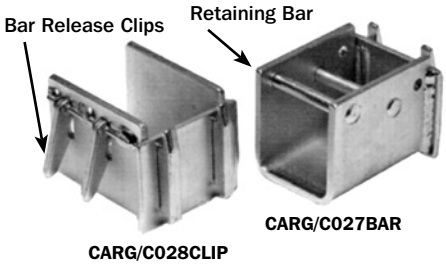

- Heavy-Duty mild steel
- Zinc plated
- Sold in pairs
- See page 140 for suitable tracks

Part No.	Suitable Track	Suitable Load Bar	Weight	Additional information
CARG/C005BAR	CARG1806	40 x 40mm	2.71kg / pair	**complete with retaining bar**
CARG/C006CLIP	CARG1806	40 x 40mm	2.71kg / pair	**complete with retaining clip**
CARG/C013BAR	CARG1806	60 x 40mm	2.85kg / pair	**complete with retaining bar**
CARG/C014CLIP	CARG1806	60 x 40mm	2.85kg / pair	**complete with retaining clip**
CARG/C027BAR	CARGSE1065	60 x 40mm	3.10kg / pair	**complete with retaining bar**
CARG/C028CLIP	CARGSE1065	60 x 40mm	3.10kg / pair	**complete with retaining clips**

Bar / Pole Storage Pockets
Zinc Plated

No. CARGSB001 W45 x H160mm
wgt. 2.63kg/pair
- Suits: 2 x **CARGBR009** or **CARGBR011** Load Bars
  3 x **CARGBR001** Load Bars
  3 x **CARG50503** or 2 x **CARG50503/H** Square Shoring Poles
  3 x **CARG13560** Shoring Poles

No. CARGSB002 W45 x H180mm
wgt. 2.63kg/pair
- Suits: 3 x **CARGBR009** or **CARGBR011** Load Bars
  4 x **CARGBR001** Load Bars
- Wall mounting

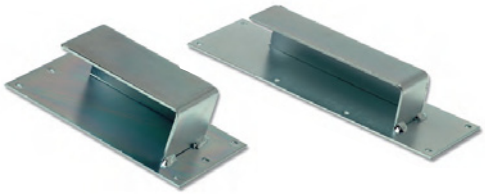

Welwyn Garden City tel +44 (0)1707 371161 fax +44 (0)1707 372603
Coseley tel +44 (0)121 520 0100 fax +44 (0)121 522 3889
website www.cbf.uk.com e-mail: sales@cbf.uk.com

LOAD RESTRAINT

Load Bar
Heavy-Duty Mild Steel Zinc Plated

No. CARGBR001/2490
wgt. 9.38kg
- Size: L2490 x W40 x D40 x 4mm thick
- Maximum Uniform Distributed Load: 2200kgs

No. CARGBR009/2490
wgt. 10.03kg
- Size: L2490 x W60 x D40 x 3mm thick
- Maximum Uniform Distributed Load: 2900kgs

No. CARGBR011/2490
wgt. 12.82kg
- Size: L2490 x W60 x D40 x 4mm thick
- Maximum Uniform Distributed Load: 3400kgs

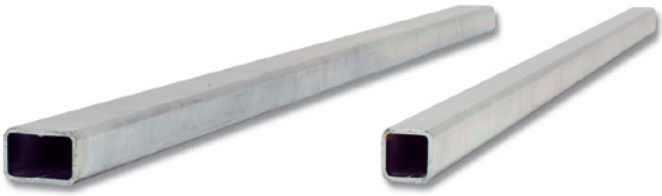

General Information
- Heavy-Duty mild steel
- Zinc plated
- To be used in conjunction with heavy-duty load bar cups – see page 142

Load Bar
Aluminium

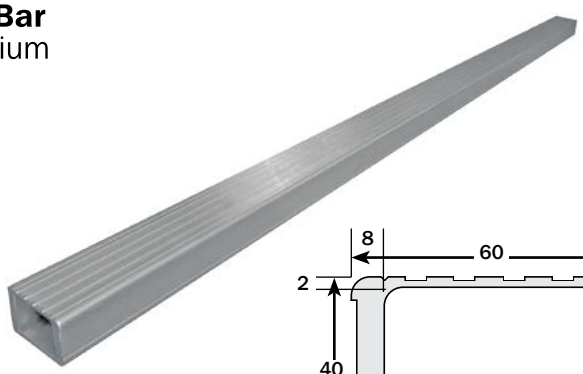

No. CARGBR026/2490
wgt. 5.60kg
- Size: L2490 x W60 x D40 x 2/8mm thick
- Heavy-Duty aluminium construction
- Extremely lightweight
- Maximum Uniform Distributed Load: 3400kgs
- To be used in conjunction with heavy-duty load bar cups – see page 142
- Lightweight plastic version available upon request

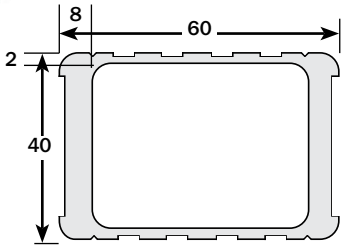

Welded Ring – Centre Pole Only
Zinc Plated

No. CARG15013/10
wgt. 0.10kg
- ø8.3 x 75mm i/d
- Suits: **CARG3314SK** strap unit – see page 138

Decking Bracket
Gold Passivated

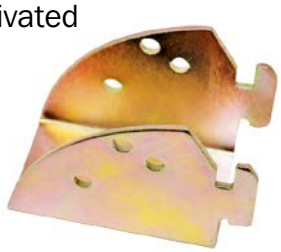

No. CARG1844
wgt. 0.26kg
- Size: L80 x W48 x H65mm
- Suits **CARG1806** & **CARG1806/S** Tracks see page 140

Decking Bracket
Gold Passivated

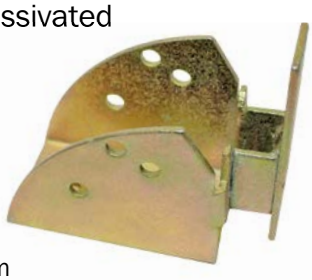

No. CARG1844/GP
wgt. 0.26kg
- Size: L86 x W48 x H65mm
- Suits garment rail panels – see page 147

Decking Bracket
Gold Passivated

No. CARG1850
wgt. 0.26kg
- Size: L90 x W50 x H70mm
- Suits **CARGSE1065** Track – see page 140

LOAD RESTRAINT

Fall Arrest Straps

Fall Arrest straps are available in many configurations.
All straps are supplied with 50mm bright yellow webbing clearly printed with '**FALL PROTECTION ONLY**' at regular intervals. Twisted snap hooks are fitted at each end, the straps are tensioned with either a cam buckle or ratchet buckle (depending on length).

- Simple to use and operate
- All straps are dated and batch numbered
- Bespoke printing service available

The following information is required when ordering:

- **Body length and width**
- **Length from bulkhead to mid-point pillar**
- **Number of straps required per side / end**

Cargo Nets

Manufactured to virtually any size and shape, from basic internal nets to roof mounted retractable units. All nets are manufactured from blue polyester coated PVC mesh allowing the operator to visibly see the contained load.
Cargo nets are ideally suited to side and transverse load containment.

When ordering please supply a drawing showing the internal height, width and fixing point dimensions.

Retractable Net System

Manufactured from blue polyester PVC mesh or heavy duty PVC material. The net system is stored in the vehicle roof until required, the net is simply pulled down over the load using sprung loaded retractable wires, when finished with the net simply returns back into the roof area. The nets can be moved along the body length using the built-in rollers and additional curtain style track, typically **DGR35/3000** – see page 239

When ordering please confirm sliding track centres & floor to roof dimensions

- Standard net size: L1800 x W450 x 500mm drop each side
- Load capacity: 2000kg
- Other sizes available upon request

Welwyn Garden City tel +44 (0)1707 371161 fax +44 (0)1707 372603
Coseley tel +44 (0)121 520 0100 fax +44 (0)121 522 3889
website www.cbf.uk.com e-mail: sales@cbf.uk.com

LOAD RESTRAINT

Round Telescopic Shoring Pole
Heavy-Duty / Mild Steel, Bright Zinc Plated

No. CARG13560/22726 Adjustable length: 2270 - 2650mm Ø42mm x 3.0mm wall thickness
wgt. 7.75kg

No. CARG13560/20525 Adjustable length: 2050 - 2550mm Ø44mm x 2.6mm wall thickness
wgt. 7.06kg

- Fits Ø25mm round hole track – see page 140
- Spring loaded end
- Maximum load capacity: 400kgs (evenly distributed)
- Other sizes available upon request

Important!
Not suitable for garment carrying. Tube diameter is too large to accept hanger – see page 147 for Ø34mm garment rails

Square Telescopic Shoring Pole
Heavy-Duty / Mild Steel, Bright Zinc Plated

No. CARG50503 Adjustable length: 2020 - 2590mm W50 x D50 x 3mm box section
wgt. 10.50kg Without handles

No. CARG50503/H Adjustable length: 2020 - 2590mm W50 x D50 x 3mm box section
wgt. 11.19kg With handles

- Fits Ø25mm round hole track – see page 140
- Spring loaded end
- Maximum load capacity: 1670kgs (evenly distributed)
- Other sizes available upon request

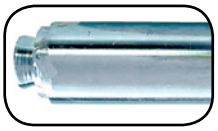

Horsebox Partition Poles
Zinc Plated

No. X-CARG/HBS/* Single sprung loaded Ø44mm x 2.6mm wall thickness

No. X-CARG/HBD/* Double sprung loaded Ø44mm x 2.6mm wall thickness

- Fits Ø25mm round hole track – see page 140
- Also available in aluminium & stainless steel
- Also available with nylon inner section to reduce noise
- Manufactured to customers own specification

When ordering; track to track measurements are required

Cargo Bar
Heavy-Duty / Aluminium

No. CARG46369/S Adjustable length: 2330 - 2720mm
wgt. 5.50kg Blue moulded rubber feet: L105 x W67mm

- Outer aluminium tube: Ø42mm
- Inner steel tube: Ø31mm
- Can be installed by positioning between inner walls and closing down the handle to tension, thus securing between panels
- Sprung end minimises panel flexibility and moulded rubber feet eliminate panel damage
- Secure loads where load restraint track is not fitted

LOAD RESTRAINT

Captive Wire Systems
Wall Mounted or Track Mounted
Eliminates theft or equipment loss

WALL MOUNTED SYSTEM

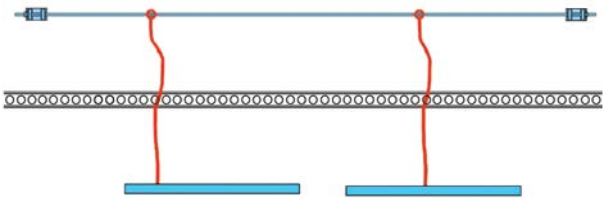

TRACK MOUNTED SYSTEM

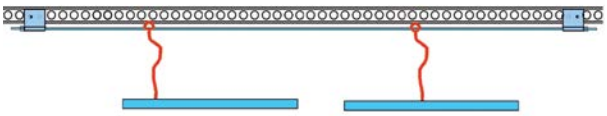

- Can be used on load bars, shoring poles, load bar cups or straps
- On the ***Wall Mounted System*** the main captive wire is fitted at the highest point possible on the trailer wall and is held in place by the wall fixing bracket
- On the ***Track Mounted System*** the main captive wire is fitted into brackets which fit straight into the track.
- Brackets for the Track System are available for most types of track
- The Load Retention Equipment is connected to the main wire by plastic covered wire ropes
- Captive Systems for retaining equipment in vehicles only work efficiently if they are totally free running. The way the system is designed there is no possible way the wires can foul or stick.
- Both systems can be fitted on new trailers or a retrofit.

When ordering, please confirm the following:
- Type of equipment, ie shoring poles, etc.
- Length of vehicle / trailer
- Height of load restraint track

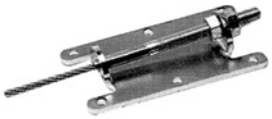

Wall Mounted Fixing Bracket

Track Mounted Fixing Bracket

Double Deck / Load Bar Beam
Aluminium

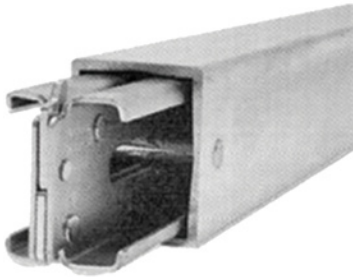

No. CARGBR019 Adjustable length: 2400 - 2670mm
wgt. 10.60kg

- Decking capacity: 1300kg (evenly distributed)
- Suits **CARGSE1065** track – see page 140
- Can be used as a support for a double deck or as a load restraint beam

Double Deck Shoring Beam
Heavy-Duty Steel – Zinc Plated

Track to track measurement required when ordering

No. CARGDD001/1
wgt. 8.10kg approx.

- Decking capacity: 1600kg (evenly distributed)
- Suits **CARGT012/2** decking track – see below
- The beam can be secured at the required height to allow a 2nd or 3rd pallet loading height. When the beams are not in use they can be stored at roof height

Decking Track
Aluminium

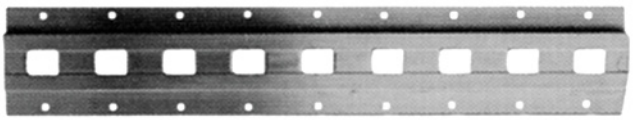

No. CARGT012/2 Size: L2000 x W95 x D15mm
wgt. 2.56kg Pitch: 50mm

- Suits **CARGDD001/1** shoring beam – see above
- 15mm Protrusion

Welwyn Garden City tel +44 (0)1707 371161 fax +44 (0)1707 372603
Coseley tel +44 (0)121 520 0100 fax +44 (0)121 522 3889
website www.cbf.uk.com e-mail: sales@cbf.uk.com

LOAD RESTRAINT

Garment Rail Panels
3mm Anodized Aluminium

- Panels are designed to offer maximum utilization of the hanging area
- Manufactured with or without a blank kick plate at bottom

Standard Size (mm)	Horizontal Pitch (mm)	Vertical Pitch (mm)	Weight (kg) Approx.
1200 x 3000 x 3	75	100	25
1200 x 2500 x 3	75	100	21
1200 x 3000 x 3	100	100	25
1200 x 2500 x 3	100	100	22
1200 x 3000 x 3	125	125	26
1200 x 2500 x 3	125	125	22
High Density			
sizes as above	75	80	on request

High density semi-oval panels offer even greater carrying capacity. Standard pitch: H75 x V80

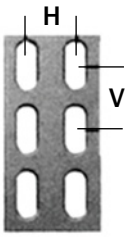

Standard

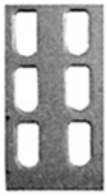
High Density

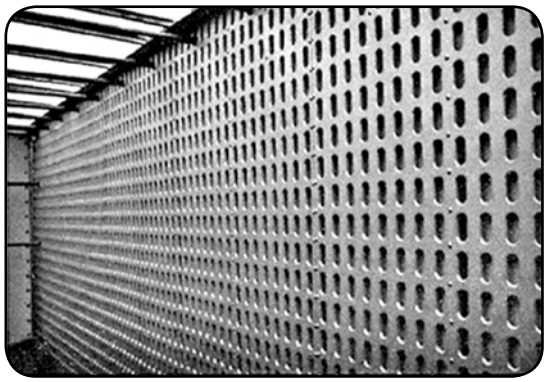

! Fitting must be a minimum of 25mm from outer wall to allow easy insertion of rail

Garment Rail
Panel Type

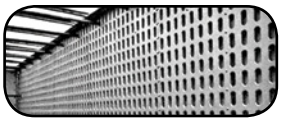

! When ordering, panel to panel measurements are required

- To suit Garment Rail Panels (above)
- Available zinc or chrome plated 33.7mm o/d x 4mm heavy duty steel

Garment Rail
Track Type

Hanger trap bar

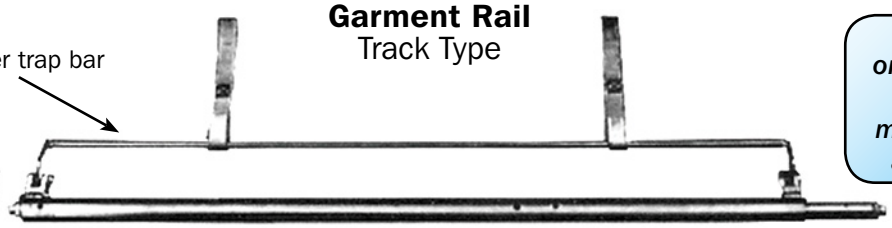

! When ordering, panel to panel measurements are required

- Can be manufactured to suit most types of load restraint track
- Zinc plated 33.7mm o/d x 4mm heavy duty steel
- Can be supplied with or without hanger trap bar
- When required to fit **CARG1806** track a pin can be added to fit into the notch at 11 o'clock to stop pole swinging

Garment Rail Pole Only

No. LKGR34/2440ZP
wgt. 7.00 kg

- Size: L2440 x Ø34mm
- Wall thickness: 4mm heavy duty steel
- Zinc plated

Decking brackets to suit – see page 143

LOAD RESTRAINT

M2 & M3 Roll Pallet Locking Systems
Wall Mounted

For securing full roll pallets onto side wall for central aisle picking on regular and multi-drop delivery vans / trucks.

M2 & M3 Systems are very similar but the main difference is the track profile. M2 track is smooth faced whereas the M3 track has a recessed channel running along the length.

All types of retaining slides and fittings are available to suit any size of roll pallet – either using the Radial Lock Assembly or Wedge Anchor for the final securing lock on the end pallet.

When ordering please confirm cage frame diameter / dimensions & how many cages to be secured to each side

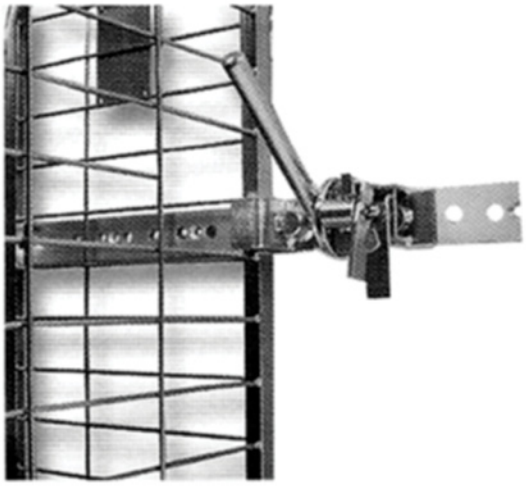

M2 System

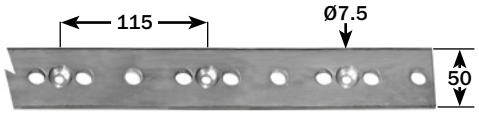

Part No.	Description	Weight (kg)
X-CARGM2/3000	Aluminium captive track, 3000mm	3.80
X-CARGM2/005	Adjustable end stop	0.50
X-CARGM2/007	Intermediate slide	0.38
X-CARGM2/008	Wedge bar anchor	0.39
X-CARGM2/009	Radial lock anchor	0.43
X-CARGM2/010	Wedge bar	2.50
X-CARGM2/011	Wedge bar end sliding stop	0.52
X-CARGM2/013	Radial lock, nearside (not shown)	1.92
X-CARGM2/014	Radial lock, offside	1.92

M2 Wedge Bar System

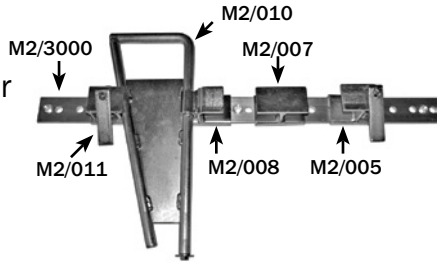

M2 Radial Lock System (Offside shown)

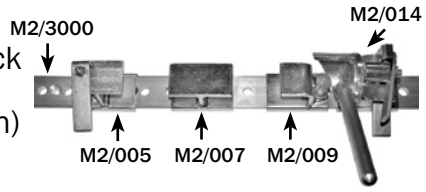

M3 System

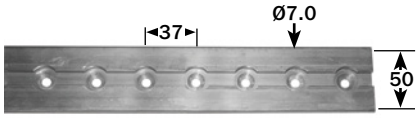

Part No.	Description	Weight (kg)
X-CARGM3/3000	Aluminium captive track, 3000mm	3.80
X-CARGM3/006	Adjustable end stop	0.50
X-CARGM3/007	Intermediate slide	0.38
X-CARGM3/008	Wedge bar anchor	0.39
X-CARGM3/009	Radial lock anchor	0.43
X-CARGM3/010	Wedge bar	2.50
X-CARGM3/012	Wedge bar end sliding stop	0.52
X-CARGM3/015	Radial lock, nearside (not shown)	1.92
X-CARGM3/016	Radial lock, offside	1.92

M3 Wedge Bar System

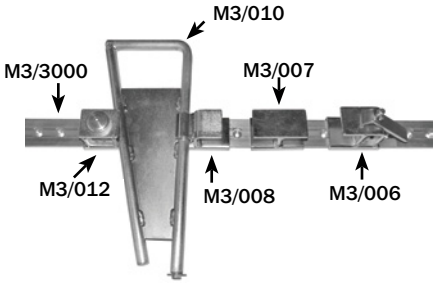

M3 Radial Lock System (Offside shown)

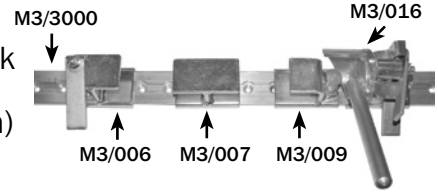

Welwyn Garden City tel +44 (0)1707 371161 fax +44 (0)1707 372603
Coseley tel +44 (0)121 520 0100 fax +44 (0)121 522 3889
website www.cbf.uk.com e-mail: sales@cbf.uk.com

LOAD RESTRAINT

Car Transporter Wheel Strap

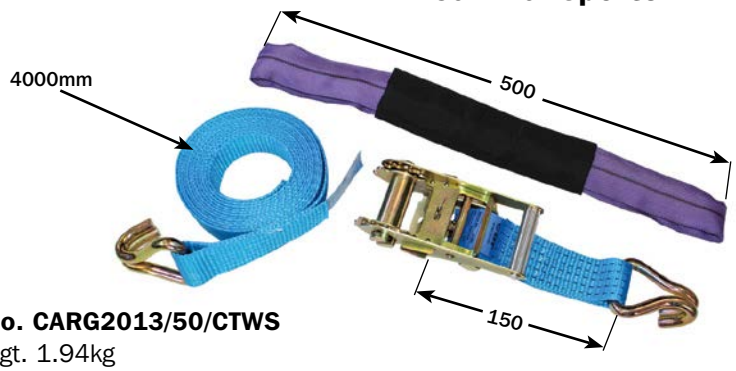

No. CARG2013/50/CTWS
wgt. 1.94kg

- 50mm Webbing
- LC: 2000 daN
- 1 Strap per wheel – all wheels to be secured
- Manufactured in accordance with BS EN12195-2:2001
- Webbing can be printed with company name / logo subject to minimum order quantity

Car Transporter Decking Plank

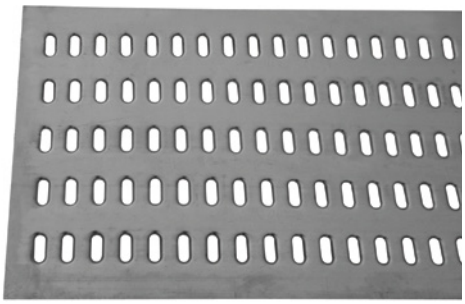

No. CARG82/A 3.00mm Aluminium
wgt. 10.50kg Size: L2500 x W610mm

No. CARG82/S 2.50mm Steel
wgt. 26.00kg Size: L2500 x W610mm

- Hole pitch: 105mm horizontal x 50mm vertical
- Other sizes and designs available upon request

Pump Truck Stop

Designed to stop pump trucks from damaging the insides of vans, trucks & trailers

No. RUBFA206/PTS
wgt. 5.80kg Size: L515 x W300 x D80mm

- Easy to use
- Extremely robust
- Moulded black rubber

MUDGUARDS – PLASTIC

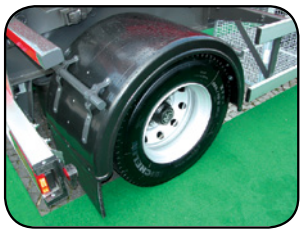

Standard
Plastic & Valuguard Range
Listed by Tyre Size

All Part No's are prefixed by **WNGP**
See pages 152-153 for dimensions

Tyre Size	Single Arch		Flat Top	
	Twin Wheel	Single Wheel	Twin Wheel	Single Wheel
	Part No.	Part No.	Part No.	Part No.
5.60R12	----------	01SE	----------	----------
155/70R12	----------	01SE	----------	----------
155R13	----------	01SE	----------	----------
155/70R13	----------	01SE	----------	----------
165R13	----------	01SE	----------	----------
165/70R13	----------	01SE	----------	----------
175/R13	----------	01SE	----------	----------
175/70R13	----------	01SE	----------	----------
185/70R13	----------	01SE	----------	----------
195/70R13	----------	01SE	----------	----------
6.70R13	19A	01	27F	05F
165 R14	19A	01SE	25SF, 27F	05F
165/75R14	19A	01SE	25SF, 27F	----------
175 R14	19A, 22A, 22A/VG	01SE	25SF, 27F	05F
175/75R14	19A, 22A	01SE	25SF, 27F	----------
185 R14	22A, 22A/VG	01, 09, 09/VG	25SF, 27F	05F
185/75R14	22A, 22A/VG	01, 01SE, 09/VG	25SF, 27F	05F
195 R14	27	01, 09	----------	----------
195/75R14	27	01, 09	25SF, 27F	----------
205 R14	28, 33, 33/VG	06C	25SF, 27F, X37F	----------
205/75R14	28, 33, 33/VG	06C	25SF, 27F, X37F	
215 R14	33, 33/VG	06C	X37F	X06F
215/75R14	33, 33/VG	06C	X37F	X06F
6.70R14	19A, 22A	06C, 01	25SF, 27F	----------
185 R15	22A, 22A/VG	01	25SF, 27F	05F
195/70R15	27	01SE, 09, 09/VG	----------	05F
6.70R15	22A	01	25SF, 27F	05F
205/65R15	----------	01SE	----------	----------
205/70R15	27	06C, 01SE	----------	X06F
215 R15	27	06C	----------	----------
225/70R15	27	09, 09/VG	----------	X06F
225/75R15	33, 33/VG	06C	----------	
205/80R15	27, 33, 33/VG	06C, 09, 09/VG	27F, X37F	X06F
235/75R15	39B, 39B/VG	06C	----------	----------
255/75R15	43B, 43D/VG	06C	----------	----------
265/70R15	43B, 43D/VG	19A	----------	----------
7.00R15	22A, 27, 28	06C, 09, 09/VG	28F	X06F
7.50R15	28, 33, 33/VG	06C, 09, 12	28F, X37F	----------

Tyre Size	Single Arch		Flat Top	
	Twin Wheel	Single Wheel	Twin Wheel	Single Wheel
	Part No.	Part No.	Part No.	Part No.
8.25 R15	39B, 33/VG, 39B/VG	----------	X37F	41F
10.00R15	43B, 43D/VG, 42B/VG	12	43F	----------
17 R400	22A	01, 06C	25SF, 27F	X06F, 05F
19 R400	28	06C	25SF, 27F, 28F	X06F
175 R16	22A, 22A/VG	01	25SF, 27F	X06F, 05F
175/75R16	22A, 22A/VG	01	25SF, 27F	X06F
185 R16	22A, 22A/VG, 27	06C	25SF, 27F	X06F
185/75R16	22A, 22A/VG, 27	06C	25SF, 27F	X06F
195 R16	22A, 22A/VG, 27	06C	25SF, 27F	X06F
195/75R16	27	06C	25SF, 27F	X06F
205 R16	28, 39C, 33, 33/VG	06C	X37F, 28F	X06F
205/75R16	28, 39C, 33, 33/VG	06C	X37F, 28F	X06F
215 R16	39C, 33, 33/VG	06C	X37F	X06F
215/75R16	33, 39C, 33/VG	06C	X37F	X06F
225/75R16	39B, 39B/VG	06C	X37F	X06F
6.00R16	22A, 22A/VG	06C	27F	X06F
6.50R16	22A, 22A/VG	06C	28F	X06F
7.00R16	28	06C	28F	----------
7.50R16	28, 33, 28/VG, 33/VG	06C, 12	28F	----------
8.25R16	33, 34, 39B, 33/VG	----------	X37F	----------
9.00R16	39, 39/VG	----------	41F	----------
11.00R16	----------	12, 24A		----------
8.25R17	34	----------	41F	----------
7R17.5	28	06C	28F	X06F
8R17.5	28	06C, 12	X37F	----------
8.5R17.5	28, 33, 28/VG	06C	28F, X37F	----------
9.5R17.5	3B, 39B/VG	12	41F	----------
10R17.5	39B, 39B/VG	----------	41F	----------
205/75R17.5	28, 33	06C	28F, X37F	X06F
215/75R17.5	33, 33/VG	06C	X37F, 41F	----------
225/75R17.5	33, 39B	06C	41F	----------
235/75R17.5	39B, 39B/VG	06C	41F	----------
245/70R17.5	39B, 39B/VG	06C	41F	----------
265/70R17.5	43B	----------	----------	----------
8R19.5	29	06C, 12	28F	----------
9.00R19.5	39B, 39B/VG	12	41F	----------

Welwyn Garden City tel +44 (0)1707 371161 fax +44 (0)1707 372603
Coseley tel +44 (0)121 520 0100 fax +44 (0)121 522 3889
website www.cbf.uk.com e-mail: sales@cbf.uk.com

MUDGUARDS – PLASTIC

JONESCO

Standard
Plastic & Valuguard Range
Listed by Tyre Size

All Part No's are prefixed by **WNGP**
See pages 152-153 for dimensions

Tyre Size	Single Arch		Flat Top	
	Twin Wheel	Single Wheel	Twin Wheel	Single Wheel
	Part No.	Part No.	Part No.	Part No.
9.50R19.5	39	12	41F	----------
245/70R19.5	39B, 39B/VG	----------	41F	----------
265/70R19.5	43B, 43D/VG	12	43F	----------
285/70R19.5	43B, 43D/VG	----------	43F	----------
385/55R19.5	----------	29, 33, 34, 33/VG	----------	----------
385/65R19.5	----------	31, 24A	----------	----------
305/70R19.5	47B, 45B/VG	24A	----------	----------
425/55R19.5	----------	34	----------	----------
445/45R19.5	----------	34	----------	----------
445/55R19.5	----------	34, 35	----------	----------
445/65R19.5	----------	38C, 38C/VG	----------	----------
18 R19.5	----------	38C, 38C/VG	----------	----------
6.5R20	29	----------	----------	----------
7.00R20	29	----------	28F	----------
7.50R20	29, 34	12	28F, X37F	----------
8.25R20	35, 39	----------	41F	----------
9.00R20	39, 41, 39/VG	----------	43F	----------
10.00R20	41, 42, 43A, 43A/VG	----------	43F	----------
10.5R20	----------	24A, 26A/VG	----------	----------
11.00R20	45A, 45A/VG	24B, 31, 26A/VG	----------	----------
12.00R20	43A, 43A/VG, 45A, 45A/VG	----------	----------	----------
12.5R20	----------	24B, 26A/VG, 24A	----------	----------
13 R20	----------	24B, 26A/VG, 30C/VG, 31/VG	----------	----------
14.00R20	----------	30C/VG, 31/VG	----------	----------
365/80R20	----------	24B, 26A/VG	----------	----------
375/75R20	----------	26A/VG	----------	----------
405/70R20	----------	30, 30C/VG, 31	----------	----------
14/80R20	----------	24B, 31, 31/VG, 26A/VG, 30C/VG	----------	----------
14.50R20	----------	30C, 30C/VG, 31, 31/VG	----------	----------
14.75/89R20	----------	30C, 30C/VG, 31, 31/VG	----------	----------
15.5/80R20	----------	38C, 38C/VG	----------	----------
11.00R22	43A, 43A/VG	24B, 26A/VG	----------	----------
8R22.5	29, 35, 33/VG	12	28F, X37F	----------
9R22.5	35	----------	41F	----------
10R22.5	39, 41, 39/VG, 45E/VG	----------	43F	----------
10/70R22.5	39, 41	----------	43F	----------
255/70R22.5	----------	----------	41F	----------

Tyre Size	Single Arch		Flat Top	
	Twin Wheel	Single Wheel	Twin Wheel	Single Wheel
	Part No.	Part No.	Part No.	Part No.
11 R22.5	42,43A, DV45, 43A/VG	----------	43F	----------
11/70R22.5	43D/VG	----------	43F	----------
275/70R22.5	43A, 43D/VG	12	43F	----------
275/80R22.5	43A, 43A/VG, 45B/VG	----------	43F	----------
285/60R22.5	43D/VG	24A	---	----------
285/70R22.5	43B	----------	---	----------
295/60R22.5	----------	24A	---	----------
295/70R22.5	45B, 45B/VG	----------	46F	----------
295/80R22.5	45A, 45A/VG, 45B/VG	24C	46F	----------
12R22.5	45A, DV45, 45A/VG, 47, 47A/VG	----------	46F	----------
365/80R22.5	----------	26AB/VG	----------	----------
305/60R22.5	47B	24A	----------	----------
12/80R22.5	43D/VG, 45A, 45A/VG	----------	----------	----------
315/60R22.5	47B	24A	----------	----------
315/70R22.5	----------	24A	----------	----------
315/80R22.5	47, 47/VG	----------	46F	----------
13R22.5	48, 47, 47/VG	23, 25	----------	----------
385/55R22.5	----------	24A	----------	----------
385/65R22.5	----------	24B, 24C, 31/VG, 26A/VG	----------	----------
15R22.5	----------	24A, 24B, 31C, 31/VG, 26A/VG	----------	----------
16.5R22.5	----------	30C, 31, 30C/VG, 31/VG	----------	----------
425/65R22.5	----------	31, 31/VG	----------	----------
445/65R22.5	----------	38C, 38C/VG	----------	----------
495/45R22.5	----------	39	----------	----------
18R22.5	----------	38C, 38C/VG	----------	----------
11R24	47, 47/VG	----------	----------	----------
12.00R24	47, 47/VG	----------	----------	----------
305/75R24	47, 48, 47/VG	----------	----------	----------
14.5R24	----------	30C, 30C/VG	----------	----------
405/70R24	----------	30C	----------	----------
455/70R24	----------	38C	----------	----------
11R24.5	45A/VG, 47/VG	24B, 26A/VG	----------	----------
285/75R24.5	45A/VG, 26A/VG	24B, 26A/VG	----------	----------

MUDGUARDS – PLASTIC

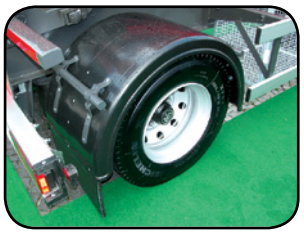

Standard Plastic Range
Listed by Part Number

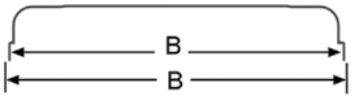

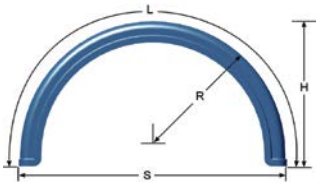

Part No.	Width B Internal (mm)	Width B External (mm)	R Radius (mm)	L Length (mm)	S Span (mm)	H Height (mm)	Weight Kgs (pair)
WNGP01	195	200	410	1370	830	450	1.99
WNGP01SE	215	220	375	1210	750	390	2.24
WNGP06C	255	270	470	1600	950	530	3.30
WNGP09	270	290	410	1280	815	410	3.09
WNGP12	285	300	550	1730	1110	550	4.85
WNGP19A	380	400	410	1370	820	450	4.41
WNGP22A	405	425	440	1430	880	480	4.85
WNGP23	360	380	670	2140	1340	690	6.30
WNGP24A	405	425	580	1930	1160	635	7.06
WNGP24B	405	425	640	1950	1305	610	7.06
WNGP24C	410	430	645	2080	1300	670	6.87
WNGP25	380	400	670	2140	1340	690	7.50
WNGP27	455	475	430	1430	860	480	4.96
WNGP28	455	475	480	1650	960	560	6.07
WNGP29	455	475	510	1650	1050	560	6.17
WNGP30C	455	475	650	2080	1300	685	8.20
WNGP31	440	460	640	1900	1280	580	6.59
WNGP33	485	505	510	1650	1020	560	6.00
WNGP34	485	505	530	1790	1060	585	6.63
WNGP35	485	505	580	1790	1160	560	6.63
WNGP38C	510	530	650	2080	1300	685	8.82
WNGP39	530	550	615	1930	1230	610	8.05
WNGP39B	530	550	510	1680	1020	545	7.17
WNGP39C	530	550	435	1350	860	430	6.07
WNGP41	560	580	640	1930	1270	585	9.26
WNGP42	580	600	640	1930	1285	610	9.70
WNGP43A	610	630	640	1930	1270	610	10.14
WNGP43B	610	630	550	1830	1100	585	9.15
WNGP44	610	630	660	2090	1320	660	10.36
WNGP45A	650	670	650	2060	1315	660	11.25
WNGPDV45	650	670	600	1930	1200	640	9.50
WNGP45B	640	660	635	1900	1285	590	11.25
WNGP45C	640	660	615	1900	1230	600	9.92
WNGP47	670	690	690	2110	1400	660	12.13
WNGP47B	670	690	535	1700	1070	540	10.25
WNGP48	710	730	650	2030	1300	650	12.13

Welwyn Garden City tel +44 (0)1707 371161 fax +44 (0)1707 372603
Coseley tel +44 (0)121 520 0100 fax +44 (0)121 522 3889
website www.cbf.uk.com e-mail: sales@cbf.uk.com

MUDGUARDS – PLASTIC

Valugard Range
Listed by Part Number

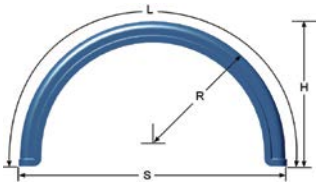

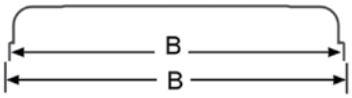

Part No.	Width B Internal (mm)	Width B External (mm)	R Radius (mm)	L Length (mm)	S Span (mm)	H Height (mm)	Weight Kgs (pair)
WNGP09/VG	280	290	410	1280	815	410	2.30
WNGP22A/VG	420	430	440	1380	880	440	3.60
WNGP26A/VG	420	430	635	1900	1270	585	5.18
WNGP28/VG	450	460	480	1500	860	480	4.10
WNGP30C/VG	450	460	640	2050	1280	660	10.84
WNGP31/VG	450	460	640	1930	1280	600	5.10
WNGP33/VG	485	495	510	1600	1020	510	4.60
WNGP38C/VG	510	520	660	2050	1320	685	6.00
WNGP39/VG	530	540	615	1930	1230	610	5.93
WNGP39B/VG	530	540	510	1610	1020	515	4.95
WNGP43A/VG	610	620	640	1930	1280	600	6.62
WNGP43D/VG	610	620	550	1790	1100	580	6.01
WNGP45A/VG	650	660	650	2090	1300	680	7.54
WNGP45B/VG	650	660	650	1900	1260	580	6.86
WNGP47/VG	670	680	685	2090	1375	660	7.73

The Valugard range of mudwings are high strength, lightweight and cost effective using standard fitment methods

Spats
Listed by Part Number

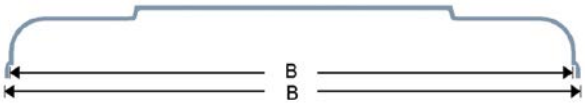

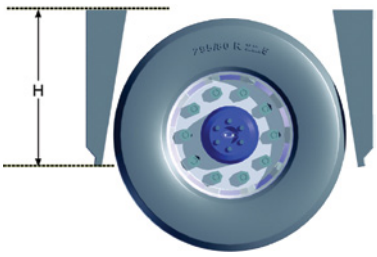

'L' Range *'SP' Range*

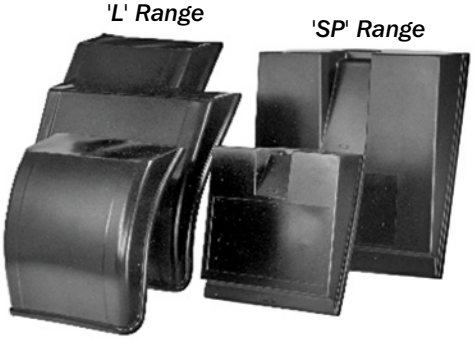

Part No.	Width B Internal (mm)	Width B External (mm)	H Height (mm)	Weight Kgs (pair)
'SP' RANGE				
WNGMSP450	440	450	410	2.00
WNGMSP650	640	650	600	4.30
'L' RANGE				
WNGML28	265	280	380	1.10
WNGML43	425	440	420	1.23
WNGML46	445	460	600	1.48
WNGML54	525	540	500	3.34
WNGML61	625	640	500	1.78
WNGML66	645	660	600	1.10

MUDGUARDS – PLASTIC

Flat Top Range

Listed by Part Number

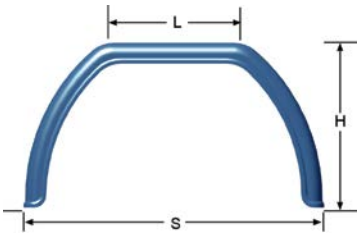

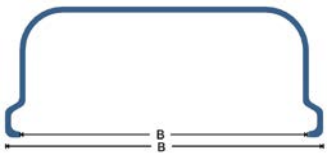

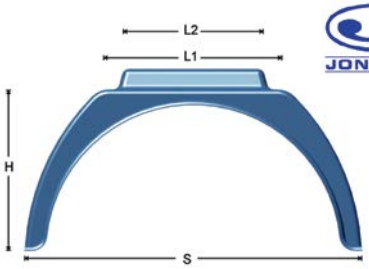

Part No.	Width B Internal (mm)	Width B External (mm)	L Length (mm)	S Span (mm)	H Height (mm)	Weight Kgs (pair)
WNGP05F	200	220	490	890	480	3.20
WNGPX06F	260	275	400	895	480	4.19
WNGP25SF	410	430	**L1** 665	880	450	5.90
			L2 500		110	
WNGP27F	450	470	500	880	450	6.30
WNGP28F	450	470	500	1000	525	6.00
WNGP36F	450	470	700	1320	710	10.60
WNGPX37F*	500	515	400	1000	550	8.38
WNGP41F	550	570	630	1130	550	9.05
WNGP43F	600	620	700	1250	625	11.90
WNGP46F	650	670	750	1360	720	13.34

*Textured surface

HighGard™

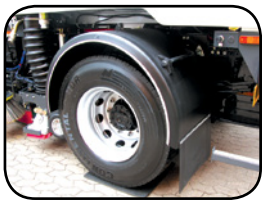

Full range of **HighGard**™ Mudguards are available to order

- Silver bead one side, black on the other
- High density polyethylene
- Strong and durable
- Widely fitted on original equipment

P279

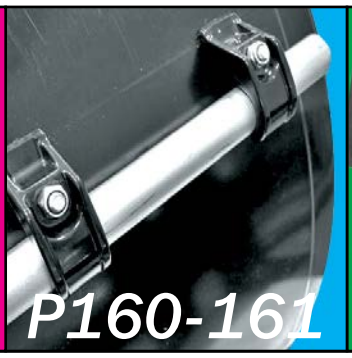
P160-161

P156-158

P159-161

Welwyn Garden City tel +44 (0)1707 371161 fax +44 (0)1707 372603
Coseley tel +44 (0)121 520 0100 fax +44 (0)121 522 3889
website www.cbf.uk.com e-mail: sales@cbf.uk.com

MUDGUARDS – PLASTIC

Tandem Mudguards Black Plastic

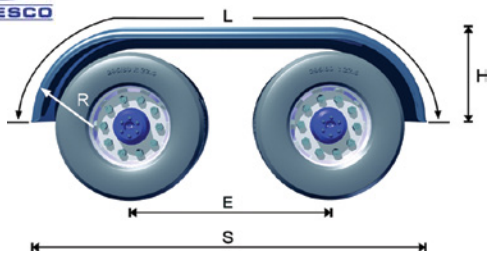

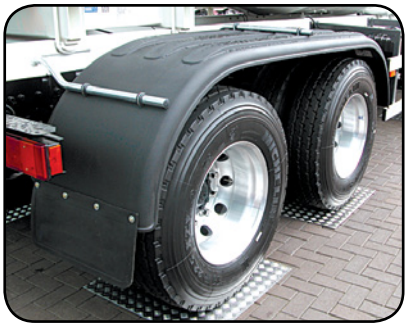

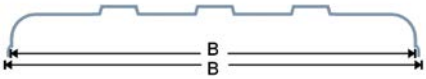

- A one-piece moulding designed to fit over 2 axles
- Textured surface finish and 3 ribs for extra strength
- Standard fitment methods
- Other colours available

Part No.	Width B Internal (mm)	Width B External (mm)	R Radius (mm)	L Length (mm)	S Span (mm)	H Height (mm)	E Axle Centres (mm)	Weight Kgs (pair)	Suitable Tyre Sizes
WNGPJT610	620	640	635	3290	2675	610	1370	19.75	9.00R20, 10.00R20, 11R22.5, 12.R22.5
WNGPJT650N	650	670	635	3385	2670	620	1400	20.75	11.00R20 E20, 12/80R22.5, 13R22.5, 315/80R22.5, 12.00R22.5
WNGPJT65A	650	670	635	3570	2970	640	1625	20.25	12R22.5, 11.00R20 E20, 12/80R22.5

Other Products available from Jonesco

Other products available from Jonesco include:

- Drum Storage
- DrumKarts
- UniKarts
- Work Floors
- Spill Trays
- Storage Boxes
- Grit / Salt Boxes
- IBC Spill Pallets
- IBC Dispenser

Please contact us for more information on any of these products or any other products manufactured by Jonesco.

MUDGUARDS – SPRAY SUPPRESSION / MUDFLAPS

Clear Pass
Spray Suppression Flaps

25 Years of proven performance

The Clear Pass® spray suppression system is designed to reduce hazardous road spray.
Clear Pass® minimises the dangers of spray hazards, containing much of the water thrown up by tyres and returning it to the road surface.

- **LEGISLATION**
  Clear Pass complies with every aspect of the law on spray suppression (EC Directive 91/226/EEC, part of the ECWVTA 2007/46/EC) with Type Approval No. A e6 2020.
- **NO SIZE LIMITATIONS**
  Clear Pass is available in virtually any required size, even for small volume requirements.
- **EASE OF INSTALLATION**
  Clear Pass is easy to install, easy to handle and easy to shape and cut to size without specific tools.
- **WEIGHT**
  Clear Pass is not unnecessarily heavy and is one of the lightest spray suppression systems available.
- **DURABILITY**
  Clear Pass resists to the toughest weather conditions without any risk of breakages.
- **PRINTING**
  Clear Pass offers durable logo printing from a choice of 12 colours.
- **ENVIRONMENT**
  Clear Pass is made from 100% PE, therefore 100% recyclable.
- **QUALITY**
  Clear Pass is manufactured under ISO 9001 (quality), ISO 14001 (environment) and TS 16949 2002, your guarantee for quality.

Installation
For installation guide please visit:
www.clear-pass.com

- Improved visibility to following vehicles
- Less fouling of vehicles
- Improved rear vision to drivers
- Contributing to road safety

Clear Pass e-marking

IMPORTANT
When trimming Clear Pass flaps, ***DO NOT*** remove the e-mark stamping (generally located at the base). Doing so, will invalidate all legal and type approval requirements.

Spray Suppression Flaps
Without Clear Pass Logo

Part No.	Width x Length (mm)	Weight Kgs (each)
WNGM120	380 x 560	1.10
WNGM134	405 x 560	1.20
WNGM115	450 x 560	1.40
WNGM121	530 x 560	1.50
WNGM116	610 x 560	1.80
WNGM117	610 x 610	2.00
WNGM122	660 x 560	2.00
WNGM540	650 x 650	2.20
WNGM174	610 x 660	2.10

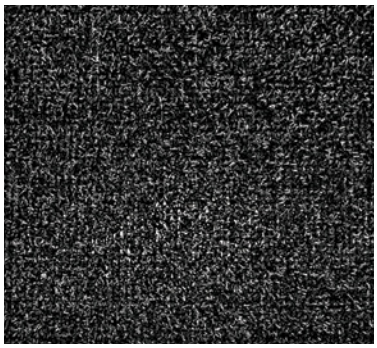

Monogramming Service
A comprehensive drawing must be supplied by customers who wish to use our monogramming service.
Subject to minimum order quantity

Welwyn Garden City tel +44 (0)1707 371161 fax +44 (0)1707 372603
Coseley tel +44 (0)121 520 0100 fax +44 (0)121 522 3889
website www.cbf.uk.com e-mail: sales@cbf.uk.com

MUDGUARDS – SPRAY SUPPRESSION / MUDFLAPS

Spray Suppression Flaps
Printed with Clear Pass® Logo

Part No.	Width x Length (mm)	Weight Kgs (each)
WNGM590	450 x 915	2.10
WNGM303	450 x 1065	2.40
WNGM309	450 x 1220	2.90
WNGM560	610 x 915	2.80
WNGM420	530 x 1015	2.80
WNGM421	610 x 1015	3.20
WNGM302	610 x 1065	3.40
WNGM301	610 x 1220	3.80
WNGM424	660 x 1020	3.50
WNGM306	660 x 1065	3.70
WNGM307	660 x 1220	4.00
WNGM425	690 x 815	2.90
WNGM308	690 x 1065	3.80
WNGM310	690 x 1220	4.40

Monogramming Service
A comprehensive drawing must be supplied by customers who wish to use our monogramming service.
Subject to minimum order quantity

Spray Suppression
Side Valances

Part No.	Width x Length (mm)	Weight Kgs (each)
WNGM344	100 x 1220	0.60
WNGM348	150 x 1220	1.00
WNGM343	200 x 1220	1.40
WNGM342	300 x 1220	2.00
WNGM339	200 x 2000	2.10
WNGM321	150 x 2000	3.20

Sail Restrictors
Galvanized Steel

Part No.	Width x Height (mm)	Ø mm	Weight Kgs (each)
WNGM360	450 x 500	9.5	0.78
WNGM382	450 x 650	9.5	1.00
WNGM383	360 x 500	9.5	0.70
WNGM388	450 x 750	9.5	1.15

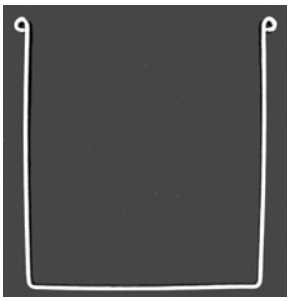

Brush System
'Cats Whiskers'

'Cats Whiskers' are available to suit most vehicle types, from coaches and buses to trucks and trailers.
'Cats Whiskers' can be supplied in either kit form or individual parts.

- Simple to fit
- Corrosion resistant
- Maintenance free
- Low weight
- Budget and standard ranges available
- Keeps vehicle livery clean
- Does not hinder wheel removal
- Self cleaning
- Works in all weather
- Performs at all speeds

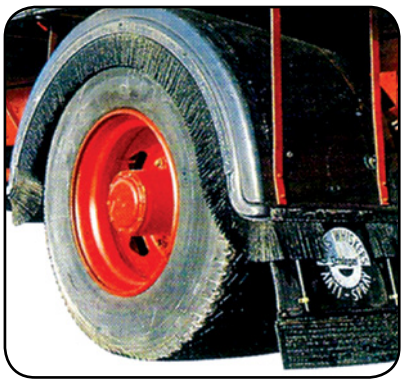

MUDGUARDS – SPRAY SUPPRESSION / MUDFLAPS

Mudflaps
Plain – Non Monogrammed

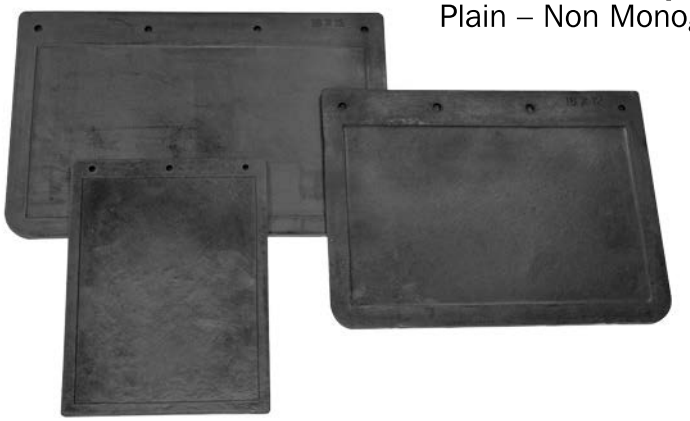

Part No.	Width x Depth (mm)	Weight Kgs (each)
WNGM0912	230 x 300	0.70
WNGM1612	400 x 300	0.93
WNGM1812	450 x 300	1.07
WNGM1816	450 x 400	1.42
WNGM2012	500 x 300	1.05
WNGM2016	500 x 400	1.12
WNGM2018	500 x 450	2.00
WNGM2212	550 x 300	1.22
WNGM2216	550 x 400	1.72
WNGM2218	550 x 450	2.01
WNGM2416	600 x 400	2.22
WNGM2418	600 x 450	2.58

- Manufactured from 'heavy-duty' 6mm black natural rubber
- Pre-drilled
- Radius corners

Mudflaps
Monogramming Service

Monogramming Service
A comprehensive drawing must be supplied by customers who wish to use our monogramming service.
Subject to minimum order quantity

- Single or multi-coloured monograms can be supplied

Coach Style Flap

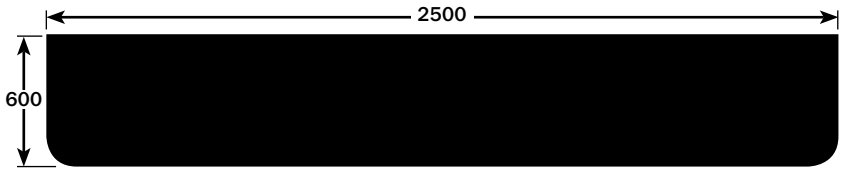

No. WNGM25004006/CF Size: L2500 x D600 x 6mm Thick
wgt. 7.50kg

- 6mm Insertion rubber
- Durable material

Welwyn Garden City tel +44 (0)1707 371161 fax +44 (0)1707 372603
Coseley tel +44 (0)121 520 0100 fax +44 (0)121 522 3889
website www.cbf.uk.com e-mail: sales@cbf.uk.com

MUDGUARDS – STAYS & BRACKETS

Mudguard Stay
Salt Spray Test Results

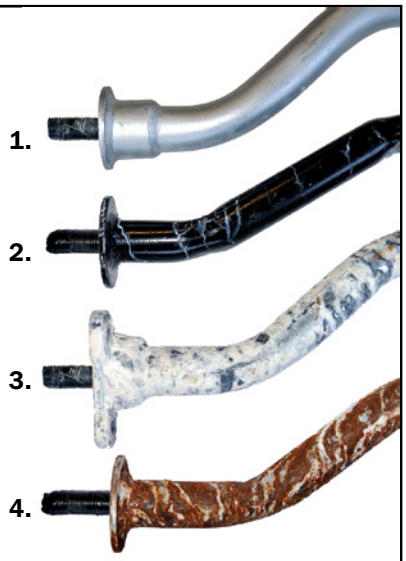

Due to the 'under chassis' location of a Mudguard Stay we offer various coatings to compete with the most hostile weather conditions and budgets. The photographs illustrate the durability of the various coatings following 500 hours of salt spray testing.

1. Geomet 500: Virtually no deterioration, extremely robust
2. Black Epoxy Coating: Very slight deterioration, generally unaffected
3. Galvanized (35-75 micron): Salt deposit & white rust steady deterioration
4. Zinc Plated (7.5 micron): General red rust, visible after 48-96 hours (not recommended)

Mudguard Stay – 34mm
Cranked / Galvanized

3 Bolt Fixing

No. WNGM12549/GV Tube: L805 x Ø34mm
wgt. 2.20kg

- 500 Hours salt spray tested – see above for durability
- Smooth galvanized finish
- 3 Bolt fixing, Ø10.5mm
- 100mm Drop
- Complete with plastic end bung
- Durable / Robust

Mudguard Stay – 34mm
Straight / Galvanized

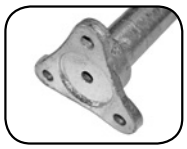
3 Bolt Fixing

No. WNGM371/SGV Tube: L660 x Ø34mm
wgt. 1.92kg

- 500 Hours salt spray tested – see above for durability
- Smooth galvanized finish
- 3 Bolt fixing, Ø10.5mm
- Durable / Robust
- Complete with plastic end bung

Mudguard Stay – 34mm
Cranked / Geomet 500 Finish

Geomet 500 is a cost effective alternative to electro and mechanical plating and offers excellent resistance to road salt, solvent and other corrosive elements.

Single Bolt Fixing – Ø16mm

No. WNGM12549/460GM Tube: L460 x Ø34mm
wgt. 1.58kg
No. WNGM12549/550GM Tube: L550 x Ø34mm
wgt. 1.79kg
No. WNGM12549/650GM Tube: L650 x Ø34mm
wgt. 2.08kg
No. WNGM12549/770GM Tube: L770 x Ø34mm
wgt. 2.20kg

- 500 hours+ salt spray tested – see above for durability
- Chromium free
- Metallic silver / grey appearance
- Complete with plastic end bung, nyloc nut & washer
- 100mm Drop
- Durable / Robust
- Sold singly

No. WNGM12549/SBGAS Gasket to suit (optional)
wgt. 0.03kg 1mm x Ø60mm Natural Rubber

Gasket

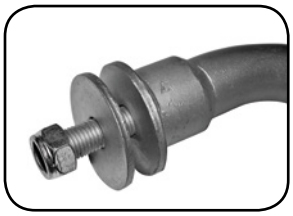
Single Bolt

MUDGUARD – STAYS & BRACKETS

Mudguard Stay – 34mm
Cranked / Black Epoxy Coated

Single Bolt Fixing – Ø16mm

No. WNGMSB100/405BLK Tube: L405 x Ø34mm
wgt. 1.80kg
No. WNGMSB100/470BLK Tube: L470 x Ø34mm
wgt. 1.95kg

- 500 hours+ salt spray tested – see page 159 for durability
- 80mm Drop
- Complete with plastic end bung, nyloc nut & washer
- Durable / Robust
- Supplied with 3mm rubber 'anti-vibration' washer

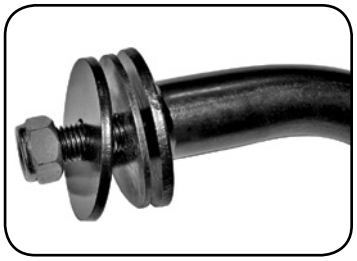

Single Bolt

Mudguard Bracket
34mm & 48mm Range

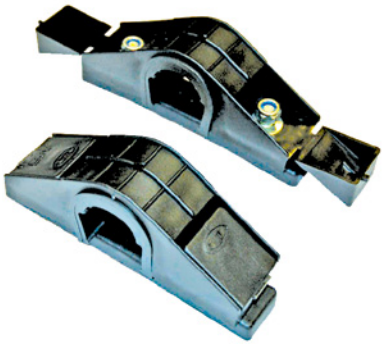

No. WNGMXPF34/4 4 Per set
wgt. 0.62kg / set of 4 Suits all Ø34mm stays

No. WNGMXPF48/4 4 Per set
wgt. 0.70kg / set of 4 Suits all Ø48mm stays

- Ready assembled
- Corrosion resistant
- Protective bolt cap

Mudguard Bracket
34mm & 42mm Range

No. WNGM20/34/4BP 4 Per set
wgt. 0.48kg / set of 4 Suits all Ø34mm stays

No. WNGM20/42/4BP 4 Per set
wgt. 0.53kg / set of 4 Suits all Ø42mm stays

- Single bolt fixing
- Corrosion resistant
- Manufactured from high impact ABS
- Complete with M10 bolt & nyloc nut

Mudguard 'U' Bracket & Back Plate
Zinc Plated

No. WNGM347/UBZP
wgt. 0.10kg Suits all Ø34mm stays

- Zinc plated steel
- 1 x 7mm 'U' Bolt & clamp, back plate & 2 nyloc nuts
- Sold singly

Welwyn Garden City tel +44 (0)1707 371161 fax +44 (0)1707 372603
Coseley tel +44 (0)121 520 0100 fax +44 (0)121 522 3889
website www.cbf.uk.com e-mail: sales@cbf.uk.com

MUDGUARD – STAYS & BRACKETS

Mudguard Bracket Back Plate
34mm Range

No. WNGMCBF14 Size: L250 x W80mm
wgt. 0.47kg

- Pre-galvanized steel back plate, 2 x 7mm 'U' bolts, nuts & washers, 2 rubber sleeves
- Suits all Ø34mm stays
- 2mm Pre-galvanized steel

Mudguard Bracket
34mm Range

No. WNGM/LR650GM Size: L340 x W40 x 5mm Thick
wgt. 0.73kg

- Geomet 500 finish
- Excellent resistance to road salt, solvent and other corrosive elements
- Suits all Ø34mm stays / extends to 40mm
- 4 x Ø13mm Fixing holes

Mudguard Bracket & Back Plate
34mm Range

No. WNGM372/S Bracket Size: L370 x W115mm
wgt. 0.44kg

No. WNGM372/STBP Back plate Size: L370 x W115mm
wgt. 0.26kg

- Suits all Ø34mm stays
- 1mm Pre-galvanized steel
- Ø9mm Fixing holes

Mudguard Bracket & Back Plate
48mm Range

No. WNGM372/H Bracket Size: L405 x W115mm
wgt. 0.54kg

No. WNGM372/HSTBP Back plate Size: L405 x W150mm (Extended width)
wgt. 0.33kg

- Suits all Ø48mm stays
- 1mm Pre-galvanized steel
- Ø9mm Fixing holes

IMPORTANT

Zinc plating is only classed as a 'sacrificial' coating
(gives itself up to the corrosive media).
A protective barrier (i.e. paint) is recommended to protect against moisture.

CBF cannot be held responsible for the effects of corrosion on zinc plated parts.

PELMET SECTION

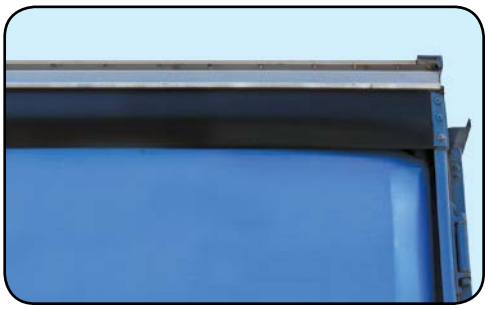

Pelmet Section
General Purpose

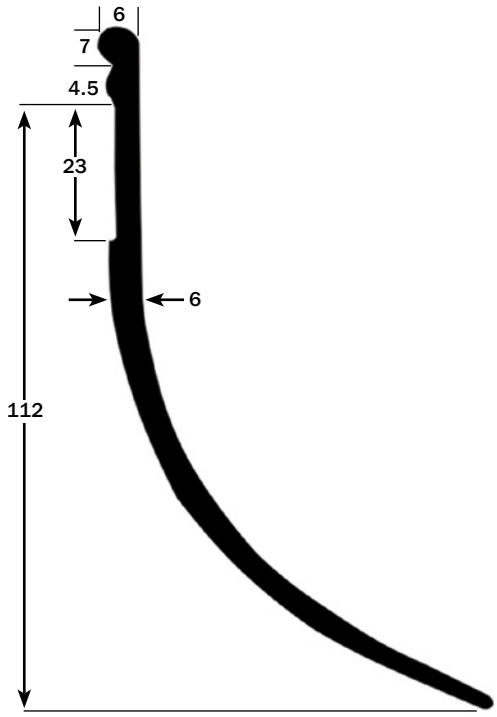

- Depth: 112mm
- Ball Ø6.0 x 7.0mm
- Other colours available (subject to minimum order quantity)
- Manufactured exclusively for ***Commercial Body Fittings Ltd***

Part No.	Colour	Length (metres)	Weight Kgs (roll)
RUMSCBF60/B	Black	18.29 (60')	16.51
RUMSCBF60/W	White	18.29 (60')	16.51
RUMSCBF100/B	Black	30.48 (100')	27.52

Pelmet Section
(PEL1)

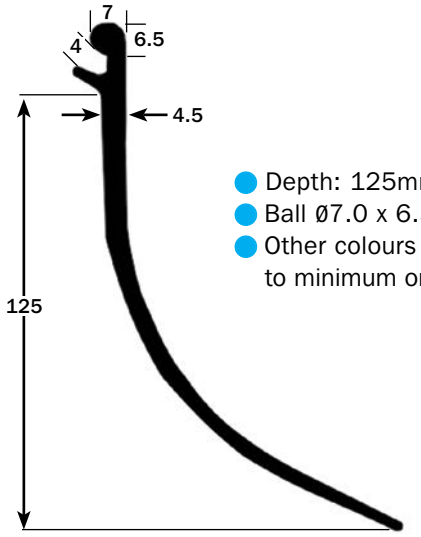

- Depth: 125mm
- Ball Ø7.0 x 6.5mm
- Other colours available (subject to minimum order quantity)

Part No.	Colour	Length (metres)	Weight Kgs (roll)
RUMSPEL1/45B	Black	13.71 (45')	9.72
RUMSPEL1/45W	White	13.71 (45')	9.72
RUMSPEL1/60B	Black	18.29 (60')	12.97
RUMSPEL1/60W	White	18.29 (60')	12.97
RUMSPEL1/100B	Black	30.48 (100')	21.61

Pelmet Section
(PEL2)

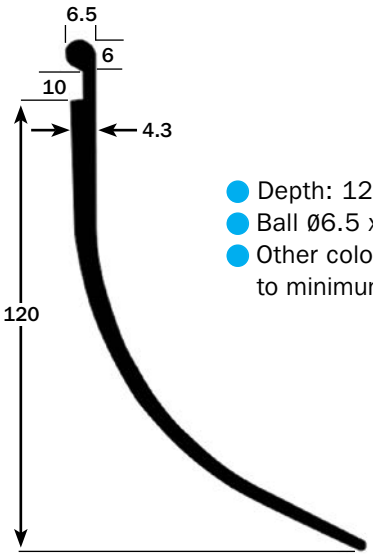

- Depth: 120mm
- Ball Ø6.5 x 6.0mm
- Other colours available (subject to minimum order quantity)

Part No.	Colour	Length (metres)	Weight Kgs (roll)
RUMSPEL2/45B	Black	13.71 (45')	10.36
RUMSPEL2/45W	White	13.71 (45')	10.36
RUMSPEL2/52B	Black	15.85 (52')	11.51
RUMSPEL2/52W	White	15.85 (52')	11.51
RUMSPEL2/200B	Black	60.97 (200')	46.04

Welwyn Garden City tel +44 (0)1707 371161 fax +44 (0)1707 372603
Coseley tel +44 (0)121 520 0100 fax +44 (0)121 522 3889
website www.cbf.uk.com e-mail: sales@cbf.uk.com

PELMET SECTION

Pelmet Section

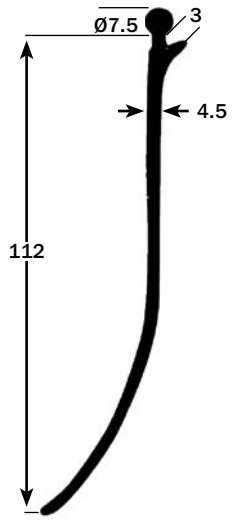

wgt. 11.90kg/roll

- Length: 14mtr
- Other colours available (subject to minimum order quantity)

Part No.	Colour	Ball dimension
RUMSDP7/14B	Black	7.5mm
RUMSDP7/14W	White	7.5mm

Pelmet Section

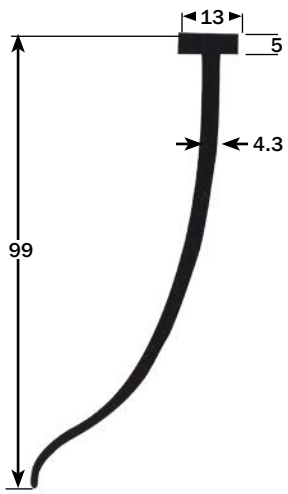

wgt. 11.90kg/roll

- Length: 14mtr
- Other colours available (subject to minimum order quantity)

Part No.	Colour	Ball dimension
RUMSDP8/14B	Black	13 x 5mm
RUMSDP8/14W	White	13 x 5mm

Pelmet Section

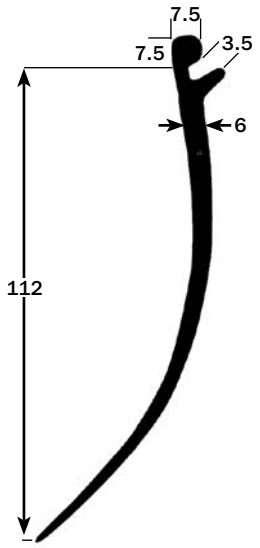

wgt. 11.90kg/roll

- Length: 14mtr
- Other colours available (subject to minimum order quantity)

Part No.	Colour	Ball dimension
RUMSDP9/14B	Black	7.5 x 7.5mm
RUMSDP9/14W	White	7.5 x 7.5mm

Pelmet Section

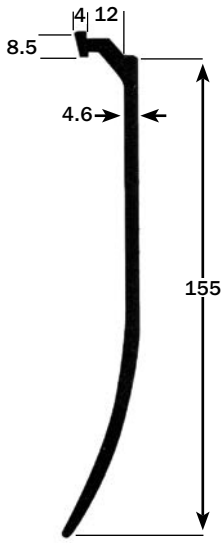

wgt. 14.00kg/roll

- Length: 14mtr
- Other colours available (subject to minimum order quantity)

Part No.	Colour	Ball dimension
RUMSDP25/14B	Black	4 x 8.5mm
RUMSDP25/14W	White	4 x 8.5mm

Pelmet Section

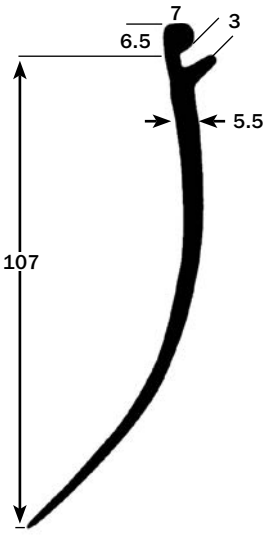

wgt. 11.90kg/roll

- Length: 14mtr
- Other colours available (subject to minimum order quantity)

Part No.	Colour	Ball dimension
RUMSDP29/14B	Black	7 x 6.5mm
RUMSDP29/14W	White	7 x 6.5mm

Pelmet Section

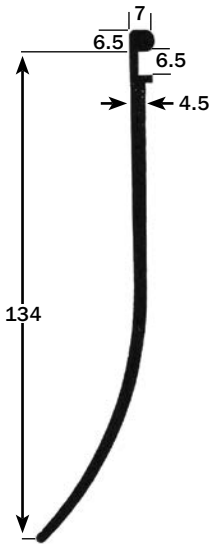

wgt. 13.02kg/roll

- Length: 14mtr
- Other colours available (subject to minimum order quantity)

Part No.	Colour	Ball dimension
RUMSDP36/14B	Black	7 x 6.5mm
RUMSDP36/14W	White	7 x 6.5mm

PILLARS & SOCKETS

Centre Pillars & Sockets
Self Colour

APLL243/SZP

APLL243/S

No. APLL243/18 450mm
wgt. 3.65kg
No. APLL243/24 600mm
wgt. 4.55kg
No. APLL243/30 760mm
wgt. 5.70kg
No. APLL243/36 915mm
wgt. 6.84kg

● 10mm Mild steel

Sockets to suit
No. APLL243/S Self colour
wgt. 1.21kg
No. APLL243/SZP Zinc plated
wgt. 1.21kg

Corner Pillars
Self Colour

Left Hand Socket

Right Hand Socket

No. APLL306/18 450mm
wgt. 1.87kg

● 5.8mm Mild steel

Sockets to suit
No. APLL306/SLH Self colour
wgt. 1.69kg
No. APLL306/SRH Self colour
wgt. 1.69kg

P132-137

P91-93

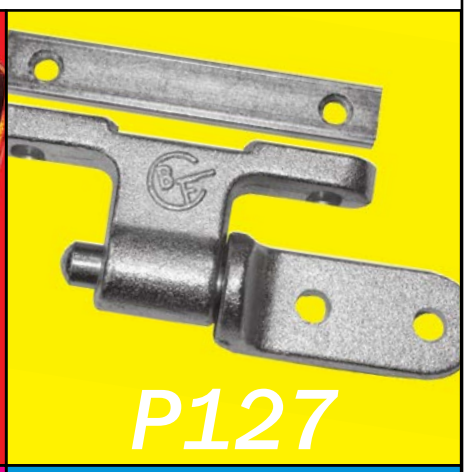

P127

P260-264

P265-267

P58-62

Welwyn Garden City tel +44 (0)1707 371161 fax +44 (0)1707 372603
Coseley tel +44 (0)121 520 0100 fax +44 (0)121 522 3889
website www.cbf.uk.com e-mail: sales@cbf.uk.com

RAMP FASTENER

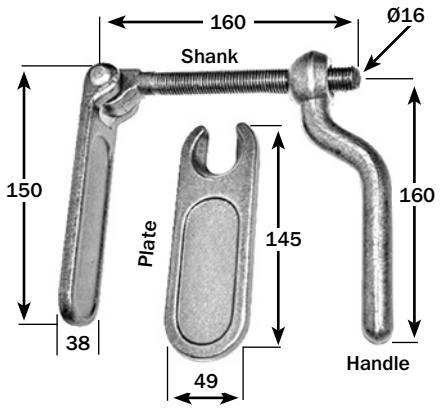

Ramp Fastener
Standard Thread

219 SERIES
STANDARD THREAD

ARMP219 Set

No. ARMP219
wgt. 3.08kg

Ramp fastener set complete
2 x Complete fasteners & plates

- Self colour finish
- Standard thread

Ramp Fastener
Fastener & Handle

219 SERIES
STANDARD THREAD

No. ARMP219/F
wgt. 1.07kg

Fastener & handle only (no plate)

- Self colour finish
- Standard thread

Ramp Fastener
Handle

219 SERIES
STANDARD THREAD

No. ARMP219/H
wgt. 0.40kg

Handle only

- Zinc plated finish
- Standard thread

Ramp Fastener
Shank

219 SERIES
STANDARD THREAD

No. ARMP219/S
wgt. 0.25kg

Shank only

- Zinc plated finish
- Standard thread

Ramp Fastener
Plate

219 SERIES
STANDARD THREAD

No. ARMP219/P
wgt. 0.47kg

Plate only

- Self colour finish

No. ARMP219/PZP
wgt. 0.47kg

Plate only

- Zinc plated finish

RAMP FASTENER

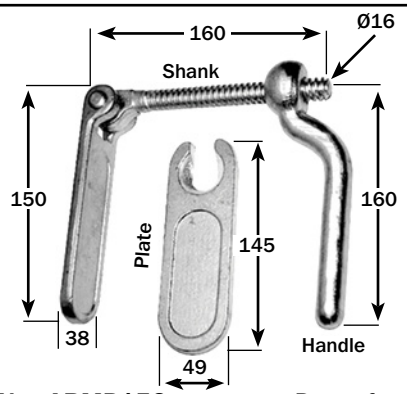

Ramp Fastener
Complete Set

153 SERIES
COARSE THREAD

No. ARMP153
wgt. 3.08kg
- Self colour finish

Ramp fastener set complete
2 x Complete fasteners & plates
- Coarse thread

No. ARMP153/ZP
wgt. 3.08kg
- Zinc plated finish

Ramp fastener set complete
2 x Complete fasteners & plates
- Coarse thread

ARMP153

Self colour

ARMP153/ZP

Zinc plated

Ramp Fastener
Fastener & Handle

153 SERIES
COARSE THREAD

No. ARMP153/FZP
wgt. 1.07kg
- Zinc plated finish
- Coarse thread

Fastener & handle only (no plate)

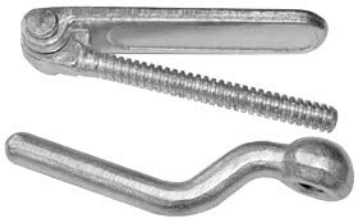

Ramp Fastener
Handle

153 SERIES
COARSE THREAD

No. ARMP153/HZP
wgt. 0.40kg
- Zinc plated finish
- Coarse thread

Handle only

Ramp Fastener
Shank

153 SERIES
COARSE THREAD

No. ARMP153/SZP
wgt. 0.25kg
- Zinc plated finish
- Coarse thread

Shank only

Ramp Fastener
Plate

153 SERIES
COARSE THREAD

No. ARMP219/P
wgt. 0.47kg
- Self colour finish

Plate only

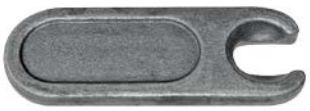

No. ARMP219/PZP
wgt. 0.47kg
- Zinc plated finish

Plate only

Welwyn Garden City tel +44 (0)1707 371161 fax +44 (0)1707 372603
Coseley tel +44 (0)121 520 0100 fax +44 (0)121 522 3889
website www.cbf.uk.com e-mail: sales@cbf.uk.com

RAMP SPRINGS

Foulger Ramp Springs

Spring only
Sold singly

No. ARMP3 Lightweight spring only
wgt. 8.79kg each

- Black painted finish
- Capacity: up to 150kg per pair
- Spring: L1092 x Ø50mm

No. ARMP4 Heavyweight spring only
wgt. 15.89kg each

- Black painted finish
- Capacity: up to 200kg per pair
- Spring: L1092 x Ø63mm

Accessories

Hook & Nuts

No. ARMP34/HK Hook & nuts only
wgt. 0.70kg each

- Zinc plated finish

This assembly works on the variable rate principle (i.e. work done by the spring increases as the load grows)
The spring is unstressed when ramp is closed except for slight tension to prevent rattle.
Spring tension is easily adjusted, thus enabling ramp to be correctly balanced.

'RT' Ramp Springs

Fitting instructions available upon request

RH illustrated

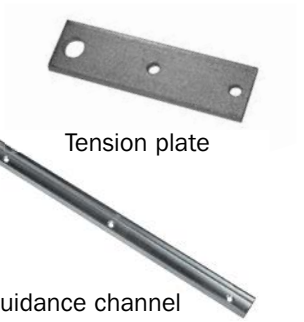

Tension plate

Guidance channel

Collars

No. ARMP12/LH Left hand spring only
wgt. 5.00kg each

- Black painted finish
- Capacity: approx. 40kg
- Spring: L300mm

No. ARMP12/RH Right hand spring only
wgt. 5.00kg each

- Black painted finish
- Capacity: approx. 40kg
- Spring: L300mm

No. ARMP20/LH Left hand spring only
wgt. 9.00kg each

- Black painted finish
- Capacity: approx. 50kg
- Spring: L500mm

No. ARMP20/RH Right hand spring only
wgt. 9.00kg each

- Black painted finish
- Capacity: approx. 50kg
- Spring: L500mm

No. ARMP1220/CH Guidance channel only
wgt. 0.54kg each

- Zinc plated finish

No. ARMP1220/CO Collar only
wgt. 0.68kg each

- Zinc plated finish
- Suits Ø25mm bar (2 per spring required)

No. ARMP1220/PL Tension plate only
wgt. 0.66kg each

- Zinc plated finish

RAMP SPRINGS

Side Mounted Ramp Springs

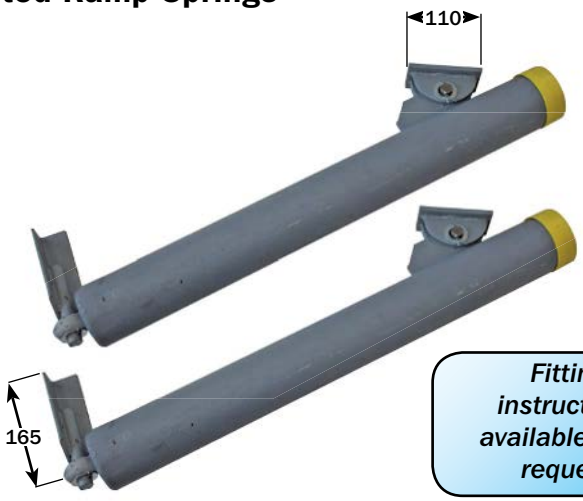

No. ARMP22/SET
wgt. 36.00kg pair

- 1 x Pair of ramp springs & fittings (as shown)
- Body: L755 x Ø90mm
- Capacity: approx. 150kg per pair
- Sold in pairs

No. ARMP21/SPR
wgt. 7.85kg each

- Replacement spring only
- Spring: L690 x Ø75mm
- Sold singly

Fitting instructions available upon request

Underfloor Ramp Springs

No. ARMP21/SET
wgt. 27.00kg pair

- 1 x Pair of ramp springs & fittings (as shown)
- Spring: L690 x Ø75mm
- Capacity: approx. 150kg per pair
- Sold in pairs

Fitting instructions available upon request

No. ARMP21/SPR
wgt. 7.85kg each

- Replacement spring only
- Spring: L690 x Ø75mm
- Sold singly
- ***Heavier capacity springs available to order***

Replacement spring

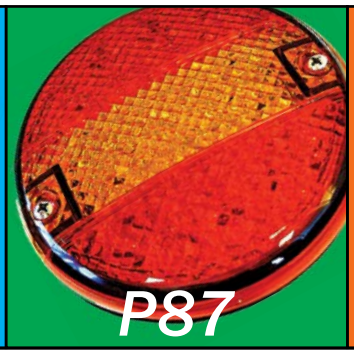

Welwyn Garden City tel +44 (0)1707 371161 fax +44 (0)1707 372603
Coseley tel +44 (0)121 520 0100 fax +44 (0)121 522 3889
website www.cbf.uk.com e-mail: sales@cbf.uk.com

RETAINERS

Retainer – Heavy Duty
Zinc Plated

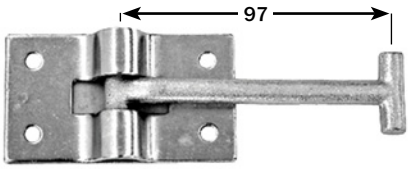

No. FRET180/HKZP Plate: L76 x W45mm
wgt. 0.18kg Hook: L97mm

● Suits No. **FRET180/SMZP**

Retainer – Heavy Duty
Zinc Plated

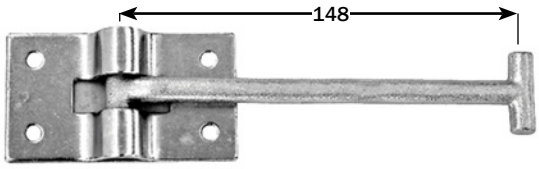

No. FRET190/HKZP Plate: L76 x W45mm
wgt. 0.21kg Hook: L148mm

● Suits No. **FRET180/SMZP**

Catch Plate – Surface Mounted
Zinc Plated

No. FRET180/SMZP Plate: L76 x W45mm
wgt. 0.03kg

● Suits No. **FRET180/HKZP** & **FRET190/HKZP**

Retainer – Medium Duty
Stainless Steel

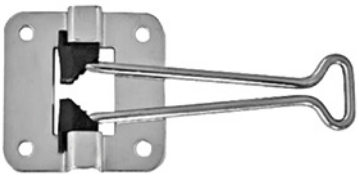

No. FRET138/HKSS Plate: L57 x W57mm
wgt. 0.07kg Hook: L95mm

● Suits No. **FRET138/SMSS**

Retainer – Medium Duty
Stainless Steel

No. FRET138/160SS Plate: L57 x W57mm
wgt. 0.08kg Hook: L160mm

● Suits No. **FRET138/SMSS**

Catch Plate – Surface Mounted
Stainless Steel

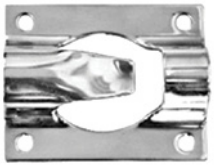

No. FRET138/SMSS Plate: L63 x W50mm
wgt. 0.04kg

● Suits No. **FRET138/HKSS** & **FRET138/160SS**

Retainer – Medium Duty
Stainless Steel

No. FRET150/HKSS Plate: L64 x W40mm
wgt. 0.07kg Hook: L90mm
Plastic housing: L64 x W60mm

● Suits No. **FRET150/SMSS**

Catch Plate – Surface Mounted
Stainless Steel

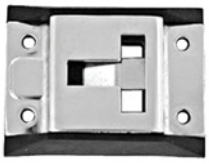

No. FRET150/SMSS Plate: L78 x W45mm
wgt. 0.08kg Plastic housing: L78 x W61mm

● Suits No. **FRET150/HKSS**

RETAINERS

Wire Type Door Retainers

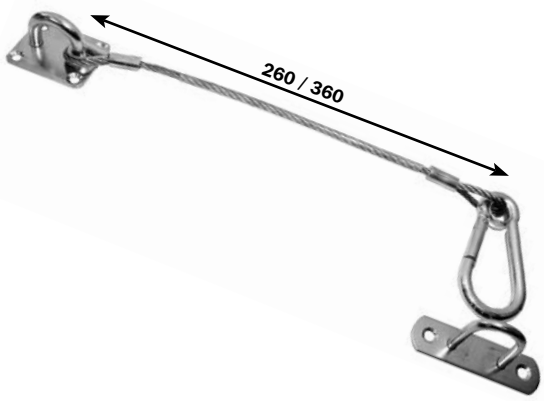

No. FRET2603 Plastic coated zinc plated wire
wgt. 0.19kg Wire: L260 x Ø3mm

- Spring hook: 75mm zinc plated
- 2 x Retaining staples, stainless steel

No. FRET2603/260SS Plastic coated stainless steel wire
wgt. 0.19kg Wire: L260 x Ø3mm

- Spring hook: 75mm stainless steel
- 2 x Retaining staples, stainless steel

No. FRET2603/360 Plastic coated zinc plated wire
wgt. 0.20kg Wire: L360 x Ø3mm

- Spring hook: 75mm zinc plated
- 2 x Retaining staples, stainless steel

No. FRET2603/260/WAO Plastic coated zinc plated wire
wgt. 0.17kg Wire: L260 x Ø3mm

- Spring hook: 75mm zinc plated
- 1 x Retaining staple, stainless steel

Staple only

FRET2603/LSSS

No. FRET2603/LSSS Retainer Staple, stainless steel
wgt. 0.02kg

- Base: L69 x W20mm

Self-Aligning Retainer
White Plastic

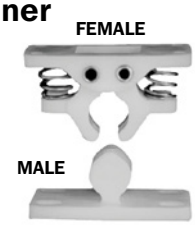

No. FRET3700/FWP Female
wgt. 0.03kg Base: L65 x W29mm

No. FRET3700/MWP Male
wgt. 0.02kg Base: L65 x W29mm

No. FRET3700/WPSET Female & Male set
wgt. 0.05kg 1 x Female & 1 x Male

- Springs: Stainless steel

Self-Algning Retainer
Steel / Zinc Plated

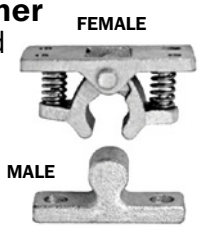

No. FRET3700/FZP Female
wgt. 0.08kg Base: L65 x W29mm

No. FRET3700/MZP Male
wgt. 0.05kg Base: L65 x W29mm

- Springs: Stainless steel

Adjustable Retainer
White Plastic

No. FRET555/F Female
wgt. 0.02kg Base: L63 x W25mm

No. FRET555/M Male
wgt. 0.02kg Base: L67 x W29mm

No. FRET555/MFSET Female & Male set
wgt. 0.04kg 1 x Female & 1 x Male

Adjustable Retainer
Black Plastic

No. FRET555/F/BLK Female
wgt. 0.02kg Base: L63 x W25mm

No. FRET555/M/BLK Male
wgt. 0.02kg Base: L67 x W29mm

No. FRET555/MFSET/BLK Female & Male set
wgt. 0.04kg 1 x Female & 1 x Male

Welwyn Garden City tel +44 (0)1707 371161 fax +44 (0)1707 372603
Coseley tel +44 (0)121 520 0100 fax +44 (0)121 522 3889
website www.cbf.uk.com e-mail: sales@cbf.uk.com

RETAINERS

Retainer Set
Rubber / Stainless Steel

No. MRF405010602
wgt. 0.14kg
Size: L143mm overall

- Flexible rubber strap
- Bracket, cam & retaining loop: 304 Grade stainless steel

Retainer
Zinc Plated

No. FRET450 Male/Female set
wgt. 0.23kg

- Male pin: L50 x Ø8mm
- Hole centres: 54mm
- Female socket complete with rubber insert
- Hole centres: 70mm
- Ø6.5mm Countersunk fixing holes

Retainer
Plastic / Rubber

No. FRET475 Male/Female set
wgt. 0.05kg

- Male pin: H27 x Ø25mm
- Female socket: H33 x Ø40mm
- Rubber with steel base
- Ø6.5mm Fixing holes

Check Strap
Leather

No. MISC300
wgt. 0.11kg

- Size: L205 x W42mm
- Hole centres: 72mm
- Supplied with 2 x staples
- Other sizes available upon request

Support Stay
With Safety Catch

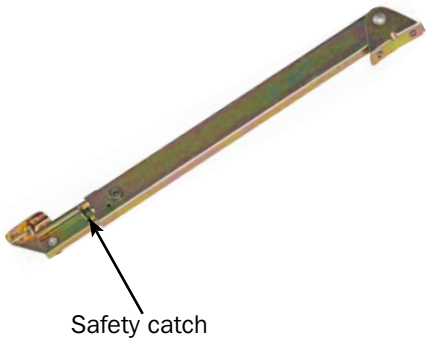

No. MISC25621
wgt. 0.32kg

- Zinc plated / gold passivated finish
- Suitable for top hinged doors and hatches
- Locks in extended position
- Length between fixing centres:
  Open: 470mm
  Closed: 285mm

Commercial Body Fittings reserve the right to alter and amend product specifications without prior notice.

All specifications, weights and dimensions printed in this catalogue are intended as a guide only

Any fixings therefore should not be determined until relevant goods are received on site.

RETAINERS

Bonnet Fastener
Small

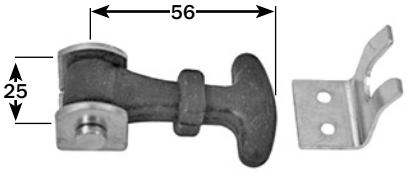

No. FRET5301 Complete fastener
wgt. 0.05kg

- Bracket & catch: Zinc plated
- Rubber hook

Bonnet Fastener
Large

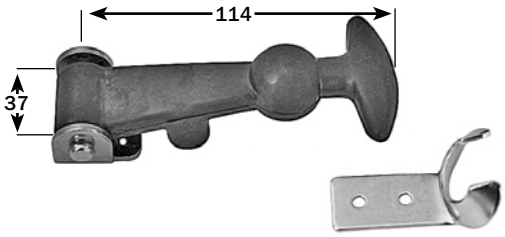

No. FRET5300 Complete fastener
wgt. 0.11kg

- Bracket & catch: Zinc plated
- Rubber hook

Lockable Trunk Fastener
Zinc Plated

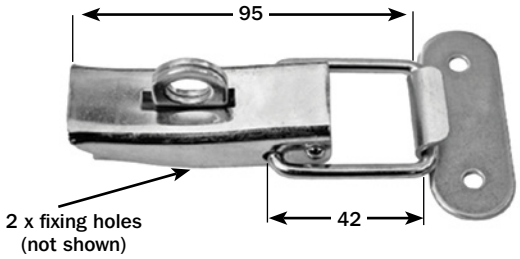

No. FTNK6127/8
wgt. 0.09kg

- Ø5mm Fixing holes

Trunk Fastener
Zinc Plated

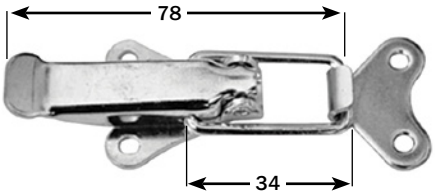

No. FTNK58
wgt. 0.04kg

- Ø4.4mm Fixing holes

Graveley Fastener
Chromium Plated

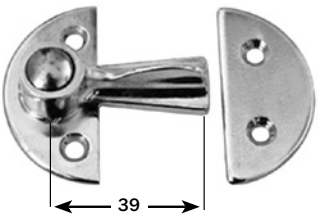

No. FMSC53/F Fastener
wgt. 0.05kg Base plate: L48 x W24mm

No. FMSC53/P Plate
wgt. 0.02kg L48 x W24mm

Small Graveley Fastener
Chromium Plated

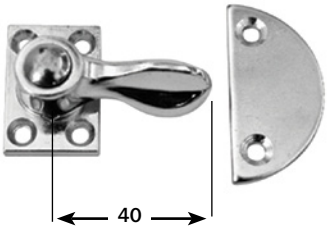

No. FMSC2936/F Fastener
wgt. 0.05kg Base plate: L32 x W22mm

No. FMSC2936/P Plate
wgt. 0.01kg L47 x W23mm

Large Graveley Fastener
Chromium Plated

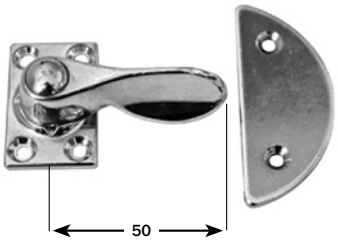

No. FMSC2899/F Fastener
wgt. 0.09kg Base plate: L40 x W25mm

No. FMSC2899/P Plate
wgt. 0.03kg L64 x W27mm

Stowage Clamp
Zinc Plated

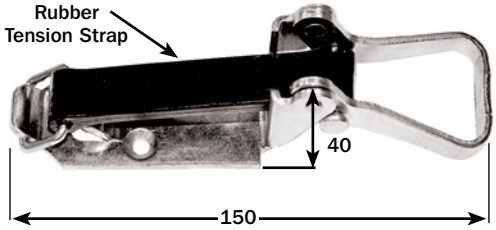

No. FTNK8150/ZP
wgt. 0.14kg

- Suitable for tool / utensil storage

Welwyn Garden City tel +44 (0)1707 371161 fax +44 (0)1707 372603
Coseley tel +44 (0)121 520 0100 fax +44 (0)121 522 3889
website www.cbf.uk.com e-mail: sales@cbf.uk.com

RETAINERS

QF Rubber Clamps

PATENT PENDING

QF Clamps are manufactured from heavy-duty UV resistant rubber, which is not affected by hot or cold climates.
Great for use in a wide range of applications ranging from:
Emergency vehicles, Tippers, ATV's, Electrical installations, Boats plus many more.

Mini QF Clamp

No. FRET/QF/1632/2
wgt. 0.06kg/pair

- Supplied in pairs
- Holds objects from Ø16 – Ø32mm
- 1 Pair supports 23kg's
- 4 x Ø5mm Fixing points per clamp

Original QF Clamp

No. FRET/QF/2557/2
wgt. 0.12kg/pair

- Supplied in pairs
- Holds objects from Ø25 – Ø57mm
- 1 Pair supports 23kg's
- 1 x Ø5mm Fixing points per clamp

Go-Between QF Clamp

No. FRET/QF/4473/1
wgt. 0.12kg each

- Supplied individually
- Holds objects from Ø44 – Ø73mm
- 1 Clamp support 23kg's
- 2 x Ø6mm Fixing points per clamp

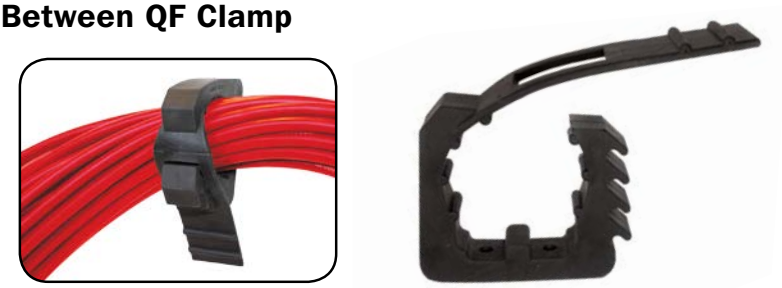

Super QF Clamp

No. FRET/QF/64220/1
wgt. 0.14kg each

- Supplied individually
- Holds objects from Ø64 – Ø220mm
- 1 Clamp support 23kg's, 2 Clamps support 45kg's
- 3 x Ø5mm Fixing points per clamp

XL QF Clamp

No. FRET/QF/381711/1
wgt. 0.23kg/pair

- Supplied in pairs
- 2 x 356mm Separate straps
- Holds objects from Ø381 – Ø711mm
- 1 Pair support 68kg's, 2 Pairs support 130kg's
- 4 x Ø6mm Fixing points per clamp

RETAINERS

Door Retainer – Handed
Zinc Plated

No. FRET25987/LH Left hand
wgt. 2.46kg

No. FRET25987/RH Right hand
wgt. 2.46kg

- Body length: 465mm
- Arm length: 320mm
- 4 x Ø8mm fixing holes
- Sprung loaded
- Rubber door stop

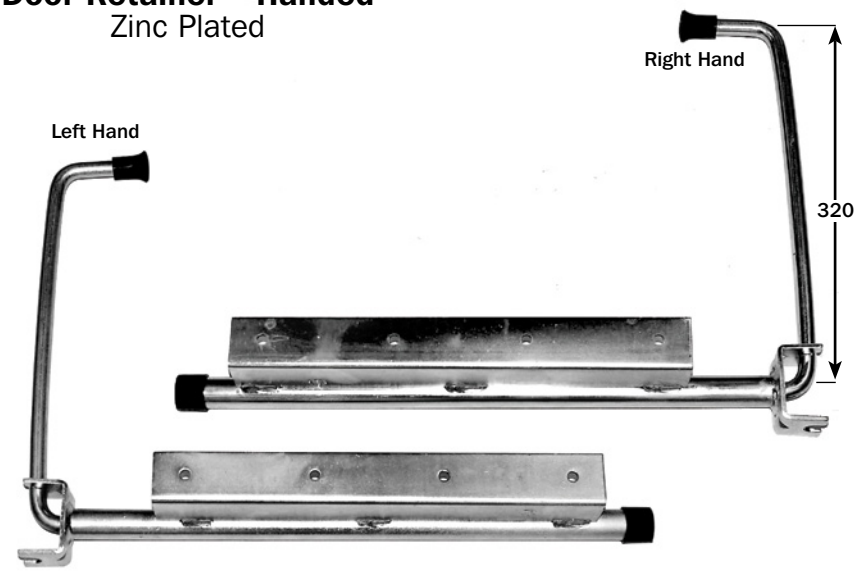

Door Retainer – Universal
Zinc Plated / Gold Passivate

No. FRET37500 Universal
wgt. 2.30kg

- Body length: 465mm
- Arm length: 370mm
- 4 x Ø6mm fixing holes
- Sprung loaded
- Grease nipple
- Suitable for both left hand & right hand fitment

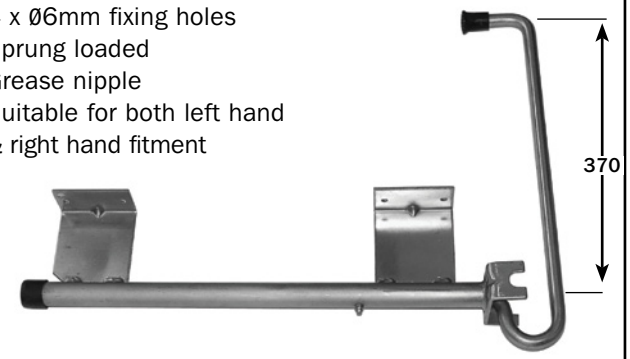

Door Retainer – Universal
Stainless Steel

No. MRF405030201 Universal
wgt. 2.50kg

- Body length: 465mm
- Arm length: 280mm
- 4 x Ø6mm fixing holes
- Sprung loaded
- Suitable for both left hand & right hand fitment

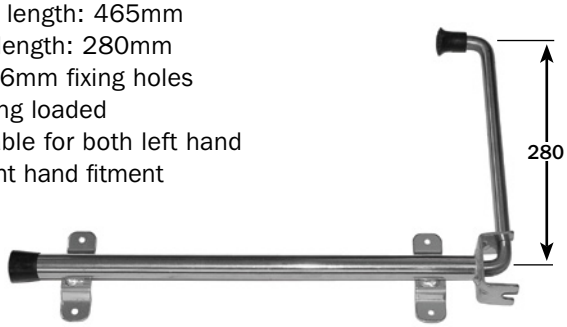

Door Retainer – Universal
Black Painted

No. FRET46700/BLK Universal
wgt. 2.55kg

- Body length: 335mm
- Arm length: 430mm
- 4 x Ø6.5mm fixing holes
- Sprung loaded
- Suitable for both left hand & right hand fitment

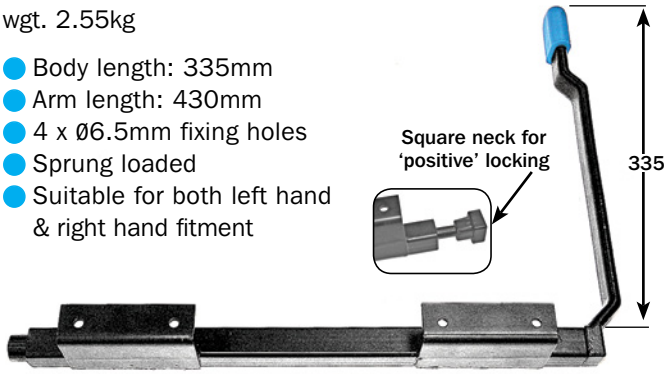

Door Retainer – Universal
Aluminium Body

No. FRET631901/ALG Universal
wgt. 1.89kg

- Body length: 502mm
- Arm length: 310mm
- 4 x Ø8.5mm fixing holes
- Sprung loaded
- Suitable for both left hand & right hand fitment
- Adjustable mounting brackets

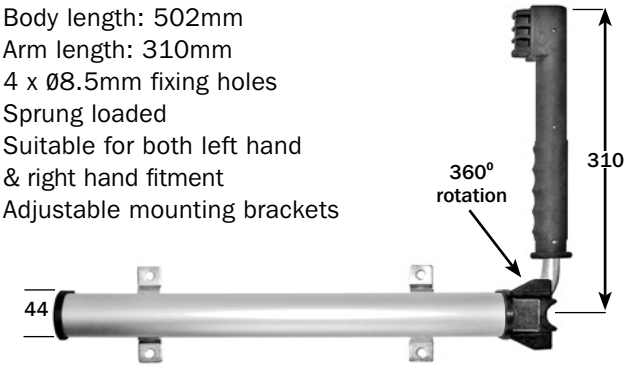

Welwyn Garden City tel +44 (0)1707 371161 fax +44 (0)1707 372603
Coseley tel +44 (0)121 520 0100 fax +44 (0)121 522 3889
website www.cbf.uk.com e-mail: sales@cbf.uk.com

RETAINERS

Cable Grips
Zinc Plated

No. AMSC272/05 Suits 5mm cable
wgt. 0.01kg

No. AMSC272/06 Suits 6mm cable
wgt. 0.01kg

No. AMSC272/10 Suits 10mm cable
wgt. 0.06kg

'D' Shackle – *screwed pin*
Zinc Plated Mild Steel

Part No.	Pin Ø (mm)	Size H x W (mm)	Wgt (kg)
AMSC37/06	6mm	26 x 13	0.02
AMSC37/08	8mm	34 x 16	0.05
AMSC37/10	10mm	37 x 19	0.10
AMSC37/11	11mm	43 x 22	0.15
AMSC37/12	12mm	47 x 25	0.20

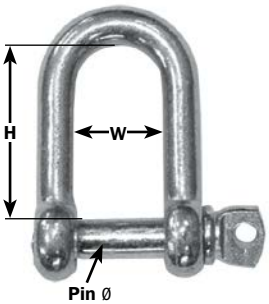

Cabin Hook
Zinc Plated

No. FRET28/150ZP 150mm
wgt. 0.12kg

No. FRET28/255ZP 255mm
wgt. 0.19kg

No. FRET28/300ZP 300mm
wgt. 0.21kg

- Complete with staple
- Ø6.5mm Fixing holes

STAPLE ONLY

No. FRET28/S Size: L43 x W42mm
- Staple only

Cabin Hook
Galvanized

No. FRET28/150GV 150mm
wgt. 0.12kg

No. FRET28/255GV 255mm
wgt. 0.19kg

- Complete with staple
- Ø6.5mm Fixing holes

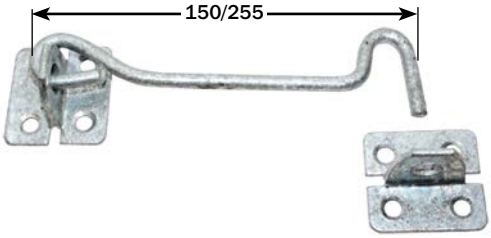

Cabin Hook
304G Stainless Steel

No. FRET28/150SS 150mm
wgt. 0.12kg

- 304G Stainless steel
- Complete with staple
- Ø6.5mm Countersunk fixing holes
- Corrosion resistant

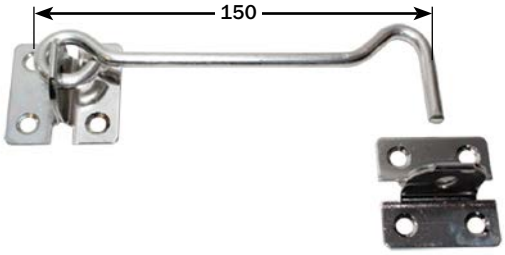

RETAINERS

Hasp & Staple
Epoxy Black Powder Coated

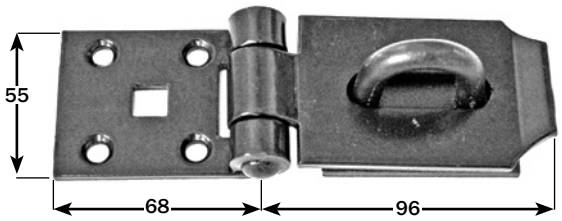

No. FHSP4507/150
wgt. 0.55kg

- Hasp: L55 x W68 x D4.5mm
- Staple: L65 x W54mm
- Ø6mm Countersunk fixing holes

Hasp & Staple
Epoxy Black Powder Coated

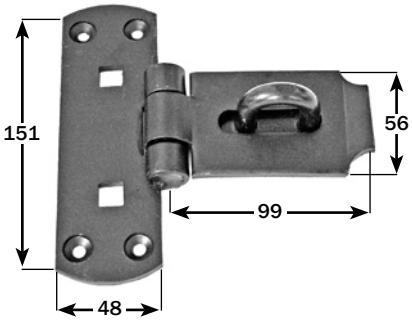

No. FHSP4195/150
wgt. 0.55kg

- Staple: L64 x W55mm
- Ø5.8mm Countersunk fixing holes

Hasp & Staple
Black Painted

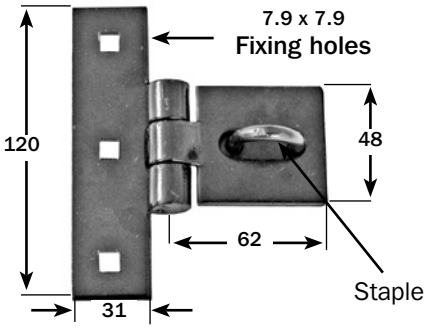

No. FHSP4196/125
wgt. 0.24kg

- Staple: L39 x W39mm
- 7.9mm Square fixing holes

No. FHSP4196/S Staple only

Hasp & Staple
Galvanized

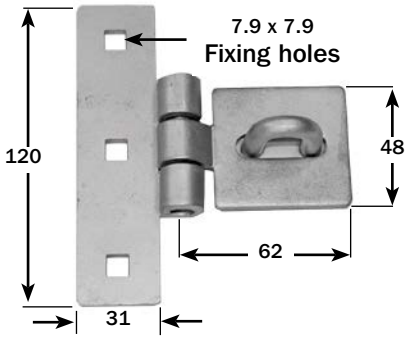

No. FHSP4196/125GV
wgt. 0.24kg

- Staple: L39 x W39mm
- 7.9mm Square fixing holes

Hasp & Staple
Zinc Plated

No. FHSP617/75ZP Size: L75 x D40mm
wgt. 0.11kg

No. FHSP617/115ZP Size: L115 x D40mm
wgt. 0.15kg

No. FHSP617/150ZP Size: L150 x D40mm
wgt. 0.18kg

No. FHSP617/S Staple only

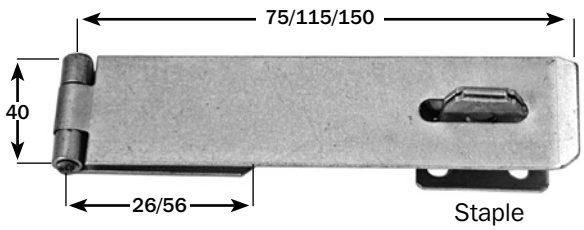

Welwyn Garden City tel +44 (0)1707 371161 fax +44 (0)1707 372603
Coseley tel +44 (0)121 520 0100 fax +44 (0)121 522 3889
website www.cbf.uk.com e-mail: sales@cbf.uk.com

ROPE HOOKS

Rope Hook – Bolt on
Self Colour & Zinc Plated Pressed Steel

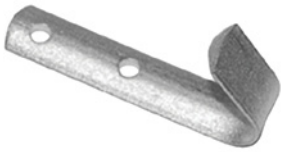

No. AROP20/75SC 75mm drilled Self colour
wgt. 0.07kg

No. AROP20/75ZP 75mm drilled Zinc plated
wgt. 0.07kg

● 2 x Ø6.5mm Fixing holes

Rope Hook – Bolt on
Zinc Plated Drop Forged Steel

No. AROP103/ZP Hook: 13mm
wgt. 0.17kg Plate: 90 x 22mm

● 2 x Ø9mm Fixing holes

Rope Hook – Bolt on
Self Colour & Zinc Plated Drop Forged Steel

No. AROP3/OB Hook: 10mm Self colour
wgt. 0.07kg Plate: 70 x 23mm

No. AROP3/OBZP Hook: 10mm Zinc plated
wgt. 0.07kg Plate: 70 x 23mm

● 2 x Ø8mm Fixing holes

Flat Backed Rope Hook – Weld on
Steel

No. AROP30/12 Ø12mm
wgt. 0.12kg

No. AROP30/14 Ø14mm
wgt. 0.18kg

No. AROP30/16 Ø16mm
wgt. 0.25kg

Rope Hook – Bolt on
Aluminium

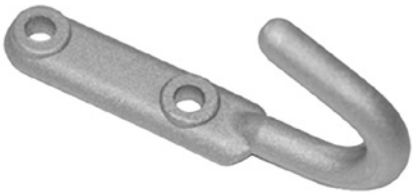

No. AALL1117 Hook: 127 x 12mm
wgt. 0.06kg Plate: 82 x 22mm

● 2 x Ø9mm Fixing holes

Rope Hook – Bolt on
Aluminium & Zinc Plated

No. AROP226/ZP Plate: 50 x 25mm
wgt. 0.06kg 2 x Ø7mm Fixing holes
● Zinc plated

No. AALL1119 Plate: 50 x 25mm
wgt. 0.03kg 2 x Ø5mm Fixing holes
● Aluminium

Flat Backed Rope Hook – Weld on
Aluminium

No. AALL1197 Ø12mm
wgt. 0.04kg

Rope Cleat – Bolt on
Zinc Plated

No. AROP19/ZP Overall: 100mm
wgt. 0.06kg Plate: 45 x 25mm

● 2 x 6.5mm Fixing holes

RIVETS & FASTENERS

Avex

Avex is a versatile breakstem fastener for use with a wide variety of material including metal, plastic and wood

- Wide grip range
- Fast installation from one side of the work piece
- Good hole fill and positive stem retention
- Installed with high speed, portable power tools with swivel and right-angled heads when access is difficult

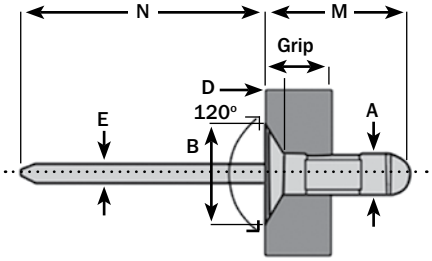

Avex – 1604 Series
Countersunk Head

Aluminium 2.5% Magnesium Alloy 5052 (plain finish)
Stem: Low Carbon Steel (zinc coated)

Nom Size (mm)	Part No.	Grip Range		'A' Dia.		'B' Dia.		'D' Dia.		'E' Dia.	'M'		'N'	Box Q'ty (1000)	Box wgt. (kg)
		min	max	min	max	min	max	min	max	max	min	max	min		
3.2	AV1604/0412	2.4	6.3	3.060	3.175	5.20	5.52	0.81	1.27	1.766	10.4	12.2	28.0	10	10.0
4.0	AV1604/0514	2.8	7.9	3.810	3.963	6.21	6.53	0.86	1.32	2.121	12.4	14.3	28.0	8	11.9
4.8	AV1604/0615	3.2	7.9	4.711	4.852	8.43	8.92	1.30	1.75	2.832	13.5	15.5	28.0	5	13.7
	AV1604/0621	6.3	12.7	4.711	4.852	8.43	8.92	1.30	1.75	2.832	18.3	20.4	28.0	4	12.4

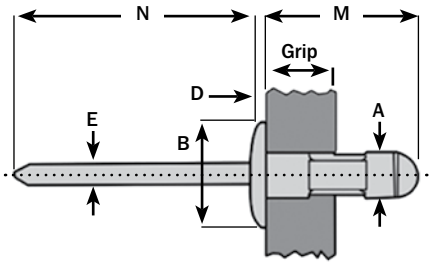

Avex – 1661 Series
Low Profile Head

Aluminium 2.5% Magnesium Alloy 5052 (plain finish)
Stem: Low Carbon Steel (zinc coated)

Nom Size (mm)	Part No.	Grip Range		'A' Dia.		'B' Dia.		'D' Dia.		'E' Dia.	'M'		'N'	Box Q'ty (1000)	Box wgt. (kg)
		min	max	min	max	min	max	min	max	max	min	max	min		
3.0	AV1661/5307	0.8	4.3	2.908	2.997	6.17	6.66	0.86	1.30	1.651	7.4	9.1	29.8	10	9.0
3.2	AV1661/0410	0.8	4.8	3.060	3.175	6.17	6.66	0.86	1.30	1.766	8.8	10.4	29.2	10	9.8
	AV1661/0412	1.2	6.3	3.060	3.175	6.17	6.66	0.86	1.30	1.766	10.4	12.0	29.2	8	8.1
	AV1661/0414	4.0	7.9	3.060	3.175	6.17	6.66	0.86	1.30	1.766	13.9	16.0	29.1	8	8.6
4.0	AV1661/0512	1.2	6.3	3.810	3.963	7.67	8.16	1.11	1.55	2.121	10.9	12.5	28.6	7	11.2
	AV1661/0516	4.0	9.5	3.810	3.963	7.67	8.16	1.11	1.55	2.121	14.4	16.2	28.6	6	10.2
	AV1661/0521	6.4	12.7	3.810	3.963	7.67	8.16	1.11	1.55	2.121	18.0	19.6	28.6	6	10.8
4.8	AV1661/0613	1.6	6.3	4.711	4.852	9.57	10.06	1.37	1.80	2.832	11.8	13.9	28.2	5	14.0
	AV1661/0619	4.8	11.1	4.711	4.852	9.57	10.06	1.37	1.80	2.832	16.6	18.7	28.5	4	12.8
	AV1661/0621	4.8	12.7	4.711	4.852	9.57	10.06	1.37	1.80	2.832	18.1	20.2	26.9	4	12.8
	AV1661/0631	4.8	19.8	4.711	4.852	9.57	10.06	1.37	1.80	2.832	26.1	28.2	25.6	3	11.7

Welwyn Garden City tel +44 (0)1707 371161 fax +44 (0)1707 372603
Coseley tel +44 (0)121 520 0100 fax +44 (0)121 522 3889
website www.cbf.uk.com e-mail: sales@cbf.uk.com

RIVETS & FASTENERS

Avex – 1641 Series
Large Flange

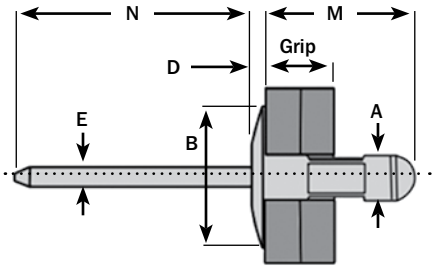

Aluminium 2.5% Magnesium Alloy 5052 (plain finish)
Stem: Low Carbon Steel (zinc coated)

Nom Size (mm)	Part No.	Grip Range		'A' Dia.		'B' Dia.	'D'	'M'	Box Q'ty (1000)	Box wgt. (kg)
		min	max	min	max	max	max	max		
4.8	AV1641/0613	1.6	6.3	4.72	4.83	16.13	2.13	13.9	3	9.9
	AV1641/0621	6.4	12.7	4.72	4.83	16.13	2.13	20.2	2	7.8
	AV1641/0631	12.7	19.8	4.72	4.83	16.13	2.13	28.2	2	8.8

Avinox – BE61 Series
Stainless Steel Breakstem

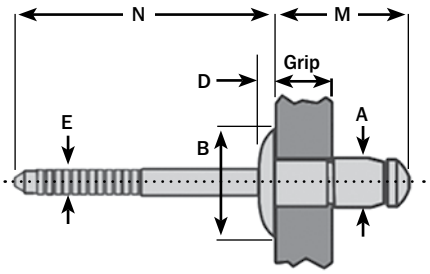

Body: 304 Grade Stainless Steel (bright finish)
Stem: 321 Grade Stainless Steel (plain finish)

Nom Size (mm)	Part No.	Grip Range		'A' Dia.		'B' Dia.		'D'		'E' Dia.	'M'	'N'	Box Q'ty (1000)	Box wgt. (kg)
		min	max	min	max	min	max	min	max	max	Max	min		
3.2	AVBE61/0408	1.0	3.0	3.10	3.30	6.00	6.60	0.70	1.10	2.10	8.9	32.0	8	11.2
	AVBE61/0411	3.0	5.0	3.10	3.30	6.00	6.60	0.70	1.10	2.10	11.4	32.0	8	15.2
	AVBE61/0414	5.0	7.0	3.10	3.30	6.00	6.60	0.70	1.10	2.10	13.6	31.8	6	13.2
4.0	AVBE61/0509	1.0	3.0	3.90	4.06	7.40	8.00	1.10	1.50	2.60	10.1	30.7	5	13.0
	AVBE61/0512	3.0	5.0	3.90	4.06	7.40	8.00	1.10	1.50	2.60	12.1	31.2	5	13.5
	AVBE61/0516	5.0	7.0	3.90	4.06	7.40	8.00	1.10	1.50	2.60	15.1	31.2	5	17.0
4.8	AVBE61/0611	1.5	3.5	4.65	4.85	9.00	9.60	1.10	1.50	3.20	12.1	30.7	3	11.4
	AVBE61/0614	3.5	6.0	4.65	4.85	9.00	9.60	1.10	1.50	3.20	14.6	30.6	3	12.6
	AVBE61/0618	6.0	8.5	4.65	4.85	9.00	9.60	1.10	1.50	3.20	17.6	30.6	3	23.0

For a comprehensive range of riveting tools, see pages 191-193

RIVETS & FASTENERS

Avdel®

Avtainers – 2311 Series

A high quality fastener designed specifically for joining plywood or glass reinforced plastics to metal framing without damaging the materials or pulling through the composition.

- Vibration and moisture resistant
- Suitable for varying hole tolerances

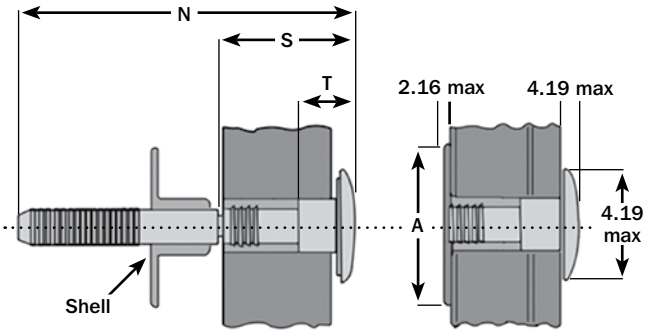

Pin & Shell: Low Carbon Steel (zinc plated)
Seal: Nylon (natural finish)
Locking Slug: Polyester Elastomer (natural finish)

Avtainers 2311-1209 & 2311-1210 do not have shouldered pins. Under no circumstances should head of pin be placed directly against container board

Nom Size (mm)	Part No.	Grip Range min	Grip Range max	'N' max	'S' min	'T' nom	Box Q'ty (1000)	Box wgt. (kg)
10	AV2311/1209	12.70	15.87	56.9	14.3	N/A	0.800	13.0
	AV2311/1210	14.27	17.45	56.9	15.9	N/A	0.800	18.4
	AV2311/1211	15.87	19.05	58.4	17.5	4.6	0.800	14.0
	AV2311/1212	17.45	20.62	60.2	19.0	6.1	0.800	15.6
	AV2311/1213	19.05	22.22	61.7	20.6	7.9	0.800	15.8
	AV2311/1214	20.62	23.80	63.2	22.2	9.4	0.800	16.8
	AV2311/1215	22.22	25.40	64.8	23.8	10.9	0.700	15.4
	AV2311/1216	23.80	26.97	66.5	25.4	12.5	0.700	16.1
	AV2311/1217	25.40	28.57	75.9	27.0	14.2	0.700	18.2
	AV2311/1218	26.97	30.15	75.9	28.6	14.2	0.700	18.6
	AV2311/1219	28.57	31.75	75.9	30.2	14.2	0.600	15.8
	AV2311/1220	30.15	33.32	75.9	31.7	14.2	0.600	15.9

Avdel®

Avtainers Shell Assembly
(Includes Locking Slug)

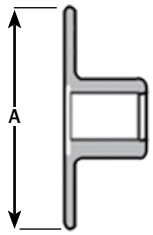

22.9mm dia. shell (Part No. AV2325-1200) must not be used directly against container board – only against metal surfaces.

Part No.	'A' Dia	Box Q'ty (1000)	Box wgt. (kg)
AV2321/1200	32.0	1	11.6
AV2325/1200	22.9	2.5	18.2

Welwyn Garden City tel +44 (0)1707 371161 fax +44 (0)1707 372603
Coseley tel +44 (0)121 520 0100 fax +44 (0)121 522 3889
website www.cbf.uk.com e-mail: sales@cbf.uk.com

RIVETS & FASTENERS

Bulbex – BF01 Series

Bulbex is an all aluminium corrosion resistant fastener.
Designed for assemblies using soft, brittle and thin materials.
During installation the fastener collapses outwards forming three large tail segments.
These spread the clamp load over a large surface area at the same time providing grip and strength.

- For use with plastics, thin gauge materials, insulation fibreboard and fibreglass
- Choice of coloured snap-on caps for matching finish

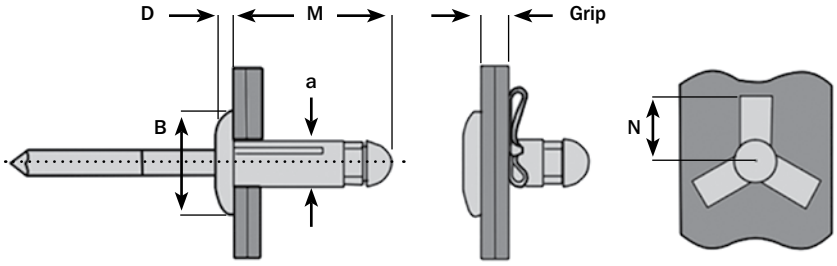

Aluminium Alloy 5251
(natural finish)
Stem: Aluminium Alloy 5251
(natural finish)

Nom Size (mm)	Part No.	Grip Range		'A'	'B' Dia.		'D'		'M'	'N'	Box Q'ty (1000)	Box wgt. (kg)
		min	max	max	min	max	min	max	max	max		
4.0	AVBF01/0516	1.0	3.0	4.191	7.69	8.16	1.27	1.53	16.0	5.79	5	5.5
	AVBF01/0523	1.0	7.0	4.191	7.69	8.16	1.27	1.53	21.2	8.00	5	6.5
4.8	AVBF01/0619	1.0	4.0	5.004	9.57	10.06	1.77	2.04	18.1	6.78	4	7.0
	AVBF01/0625	1.0	9.0	5.004	9.57	10.06	1.77	2.04	23.3	9.02	3	5.4
	AVBF01/0630	4.0	12.0	5.004	9.57	10.06	1.77	2.04	27.1	11.20	3	5.4

K.T.R. Series

A high strength, all aluminium alloy fastener with a very large blind size area against the rear sheet.

- Ideal for GRP & thin sheet materials
- Water-resistant neoprene seal

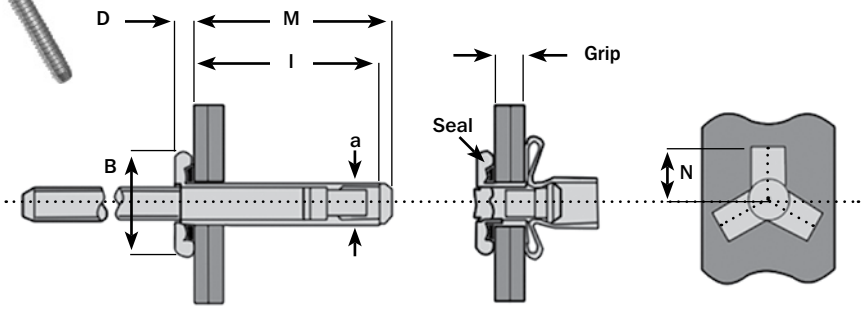

Aluminium Alloy
(brightened finish)
Stem: Aluminium Alloy
(natural finish)

Nom Size (mm)	Part No.	Grip Range		'A' Dia.	'B' Dia.		'D'		'L'	'M'	'N'	Box Q'ty (1000)	Box wgt. (kg)
		min	max	max	min	max	min	max	max	max	max		
4.8	AVKTR06W/04	1.27	6.35	4.890	10.9	11.3	2.1	2.2	22.6	26.41	9.7	4	7.2
	AVKTR06W/06	4.75	9.53	4.890	10.9	11.3	2.1	2.2	25.0	28.81	9.7	4	8.0
	AVKTR06W/09	9.53	14.27	4.890	10.9	11.3	2.1	2.2	28.5	32.31	9.7	4	8.72
	AVKTR06W/12	14.27	19.05	4.890	10.9	11.3	2.1	2.2	32.0	35.81	9.7	4	9.8
6.4	AVKTR08W/04	1.52	6.35	6.435	13.8	14.2	2.8	2.9	23.5	27.31	10.5	2	6.82
	AVKTR08W/06	4.75	9.53	6.435	13.8	14.2	2.8	2.9	26.7	30.51	10.5	2	7.26

RIVETS & FASTENERS

T-Lok BM01 Series

T-Lok produces a positive, efficient and cost effective method of assembly

- For applications involving joining metal to wood, GRP, plastics,rubber and glassfibre materials
- High resistance to pull-out loads

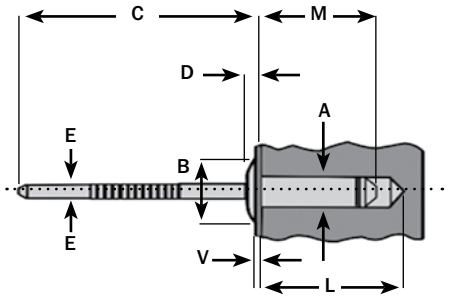

Body: Low carbon steel
(zinc plated & gold passivated)
Stem: Low Carbon Steel (zinc plated)

*'V' = Metal face thickness

Nom Size (mm)	Part No.	'A' Dia.		'B' Dia.		'C'	'D' Dia.		'E' Dia.	'V'		'L'		'M'		Box Qty (1000)	Box wgt. (kg)
		min	max	min	max	min	min	max	max	min	max	min	max	min	max		
4.3	AVBM01/0512	4.127	4.293	7.67	8.16	36.3	1.11	1.30	2.515	1.27	0.25	9.1	10.2	11.1	12.4	5	12.7
	AVBM01/0520	4.127	4.293	7.67	8.16	36.5	1.11	1.30	2.515	7.62	0.25	9.1	16.5	17.5	18.7	4	12.0
4.8	AVBM01/0614	4.521	4.737	9.83	10.19	34.1	1.91	2.03	2.890	3.05	0.25	9.2	12.0	14.3	13.2	4	15.2
	AVBM01/0620	4.521	4.737	9.83	10.19	35.8	1.91	2.03	2.890	7.62	0.25	9.2	16.7	17.8	18.9	3	12.9

S.R. Sealed Rivet – SR01 Series

Sealed and corrosion resistant locked stem fastener

- Air and water resistant seal
- Operates efficiently with oversize or elongated holes

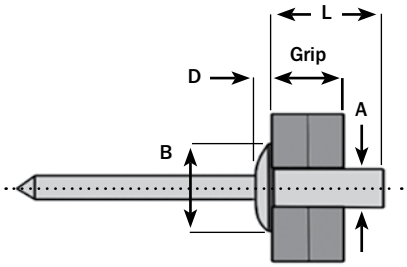

Body: Aluminium 5% Magnesium Alloy 5052
(natural finish)
Stem: Low Carbon Steel (phosphated)

Nom Size (mm)	Part No.	Grip Range		'A' Dia.		'B' Dia.		'D'		'L'	Box Qty (1000)	Box wgt. (kg)
		min	max	min	max	min	max	min	max			
4.8	AVSR01/4880	1.0	3.5	4.72	4.88	9.20	9.80	1.35	1.65	8.0	4	10.0
	AVSR01/4895	3.5	5.0	4.72	4.88	9.20	9.80	1.35	1.65	9.5	4	11.2
	AVSR01/4811	5.0	6.5	4.72	4.88	9.20	9.80	1.35	1.65	11.0	4	11.2
	AVSR01/4812	6.5	8.0	4.72	4.88	9.20	9.80	1.35	1.65	12.5	4	11.6
	AVSR01/4814	8.0	9.5	4.72	4.88	9.20	9.80	1.35	1.65	14.0	3	8.7
	AVSR01/4816	9.5	11.0	4.72	4.88	9.20	9.80	1.35	1.65	16.0	3	9.5
	AVSR01/4818	11.0	13.0	4.72	4.88	9.20	9.80	1.35	1.65	18.0	3	9.30
	AVSR01/4821	13.0	16.0	4.72	4.88	9.20	9.80	1.35	1.65	21.0	3	10.5

Welwyn Garden City tel +44 (0)1707 371161 fax +44 (0)1707 372603
Coseley tel +44 (0)121 520 0100 fax +44 (0)121 522 3889
website www.cbf.uk.com e-mail: sales@cbf.uk.com

RIVETS & FASTENERS

Avdelok

A high strength, vibration resistant bolt-type fastener

- For applications demanding durable high quality assemblies
- Available with various adaptors and nose extensions
- Eliminates problems associated with loose nuts, lock nuts, bolts and solid rivets

Avdelok Bolts – 2611 Series

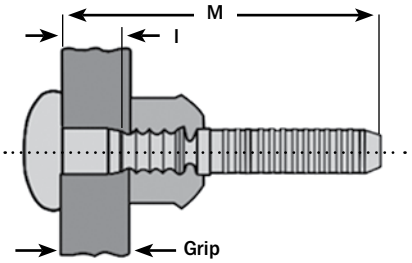

Pin: Carbon Boron Steel (zinc plated finish)
Collar: Low Carbon Steel (zinc plated)

Grip range shown is with a full collar. Use of half collar increases the grip range to that of the next longest pin.

Nom Size (mm)	Part No.	Grip Range min	Grip Range max	'L' nom	'M' nom	Box Qty (1000)	Box wgt. (kg)
4.8	AV2611/0601	0.79	2.39	1.96	31.24	2	10.1
	AV2611/0602	2.39	3.96	3.56	33.02	2	10.9
	AV2611/0603	3.96	5.56	5.13	34.54	2	11.2
	AV2611/0604	5.56	7.14	6.73	36.07	2	11.8
	AV2611/0605	7.14	8.74	8.31	37.59	2	12.0
	AV2611/0606	8.74	10.31	9.91	39.37	1.5	9.4
	AV2611/0607	10.31	11.91	11.48	40.89	3	19.8
	AV2611/0608	11.91	13.49	13.08	42.42	1	12.2
	AV2611/0609	13.49	15.09	14.66	43.94	1.5	13.5
6.4	AV2611/0802	2.39	3.96	3.66	36.32	1	10.8
	AV2611/0803	3.96	5.56	5.23	38.10	1	11.0
	AV2611/0804	5.56	7.14	6.83	39.62	1	11.4
	AV2611/0805	7.14	8.74	8.41	41.15	1	11.8
	AV2611/0806	8.74	10.31	10.01	42.67	1	12.3
	AV2611/0807	10.31	11.91	11.58	44.45	1	12.5

Nom Size (mm)	Part No.	Grip Range min	Grip Range max	'L' nom	'M' nom	Box Qty (1000)	Box wgt. (kg)
6.4	AV2611/0808	11.91	13.49	13.18	45.97	1	13.0
	AV2611/0809	13.49	15.09	14.76	47.50	1	13.5
	AV2611/0810	15.09	16.66	16.36	49.02	.750	10.9
	AV2611/0812	18.24	19.84	19.53	52.32	.700	10.5
	AV2611/0814	21.41	24.61	22.71	55.37	1	15.4
	AV2611/0816	24.61	26.19	25.88	58.67	1	16.2
	AV2611/0818	27.79	29.36	29.06	61.72	1	17.2
8.0	AV2611/1004	5.94	8.33	7.62	45.72	.500	10.4
	AV2611/1006	8.33	10.72	10.01	48.26	.500	10.8
	AV2611/1007	10.72	13.11	12.37	50.29	.500	11.4
	AV2611/1009	13.11	15.47	14.76	52.83	1	23.0
9.6	AV2611/1204	4.75	7.92	6.81	51.31	.500	17.5
	AV2611/1206	7.92	11.10	9.98	54.61	.500	18.7
	AV2611/1208	11.10	14.27	13.16	57.66	.500	19.4
	AV2611/1210	14.27	17.45	16.33	60.96	.250	10.2

Avdelok Bolts – 2612 Series
90° Countersunk Head Type

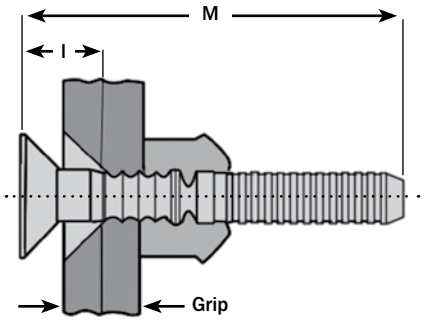

Pin: Carbon Boron Steel (zinc plated)
Collar: Low Carbon Steel (zinc plated)

Grip range shown is with a full collar. Use of half collar increases the grip range to that of the next longest pin.

Nom Size (mm)	Part No.	Grip Range min	Grip Range max	'L' nom	'M' nom	Box Qty (1000)	Box wgt. (kg)
4.8	AV2612/0603	3.96	5.56	5.13	34.54	2.5	12.0
	AV2612/0604	5.56	7.14	6.73	36.07	4	20.2
	AV2612/0606	8.74	10.31	9.91	39.37	1	10.1
6.4	AV2612/0804	5.56	7.14	6.83	39.62	2	19.2
	AV2612/0806	8.74	10.31	10.01	42.67	1	11.1
	AV2612/0808	11.91	13.49	13.18	45.97	1	11.9

RIVETS & FASTENERS

Avdel®

Avdelok Full Collars – 2662 Series
To Suit 2611 & 2612 Series

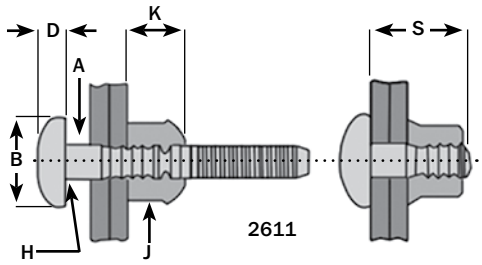

Low Carbon Steel
(zinc plated)

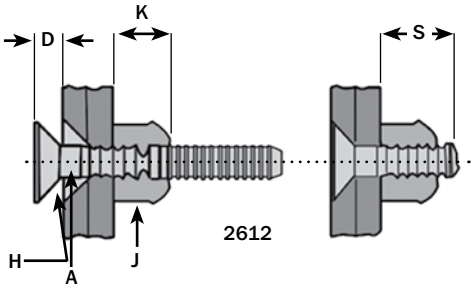

Nom Size (mm)	Part No.	'A' min	'A' max	'B' min	'B' max	'D' max	'H' Rad max	'J' max	'K' max	'S' max	Box Qty (1000)	Box wgt. (kg)
4.8	**AV2662/0600**	4.85	4.95	10.31	11.91	2.16	0.51	7.85	6.35	9.40	10	12.0
6.4	**AV2662/0800**	6.45	6.58	13.49	15.09	2.79	0.51	10.31	8.13	12.20	4	10.6
8.0	**AV2662/1000**	8.05	8.18	18.26	19.84	3.56	0.63	12.50	9.65	15.50	2	10.5
9.6	**AV2662/1200**	9.40	9.78	21.03	23.42	4.06	0.63	15.19	11.68	18.54	1	9.2

Avdelok Flange Collars – 2615 Series
To Suit 2611 & 2612 Series

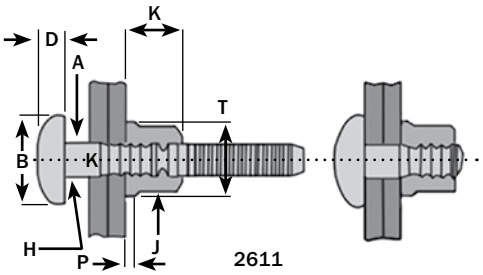

Low Carbon Steel
(zinc plated)

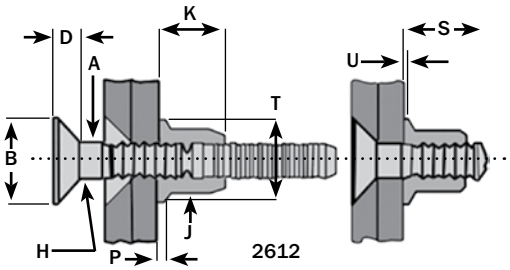

Nom Size (mm)	Part No.	'A' min	'A' max	'B' min	'B' max	'D' max	'H' Rad max	'J' max	'K' max	'P' max	'S' max	'T' max	'U' max	Box Qty (1000)	Box wgt. (kg)
4.8	**AV2615/0600**	4.85	4.95	9.04	10.01	3.35	0.76	7.90	6.86	1.32	8.64	9.91	1.76	5	12.7
6.4	**AV2615/0800**	6.45	6.58	12.06	13.33	4.09	0.51	10.31	9.40	1.70	10.67	13.08	0.94	4	12.0
8.0	**AV2615/1000**	8.05	8.18	15.09	16.66	5.44	0.63	12.83	10.67	2.16	12.19	16.26	1.22	4	15.2
9.6	**AV2615/1200**	9.65	8.18	18.11	16.66	6.65	0.63	15.44	13.28	2.51	14.73	19.96	1.42	3	12.9

IMPORTANT

Zinc plating is only classed as a 'sacrificial' coating
(gives itself up to the corrosive media).
A protective barrier (i.e. paint) is recommended to protect against moisture.

CBF cannot be held responsible for the effects of corrosion on zinc plated parts.

Welwyn Garden City tel +44 (0)1707 371161 fax +44 (0)1707 372603
Coseley tel +44 (0)121 520 0100 fax +44 (0)121 522 3889
website www.cbf.uk.com e-mail: sales@cbf.uk.com

RIVETS & FASTENERS

Maxlok

A versatile fastener with an extensive grip range. Swaging of the collar into the locking grooves ensures a high quality fastening.
Common grip and break grooves along the pin allow flush break-off during installation

Maxlok Bolts – 1901 Series
Brazier Head

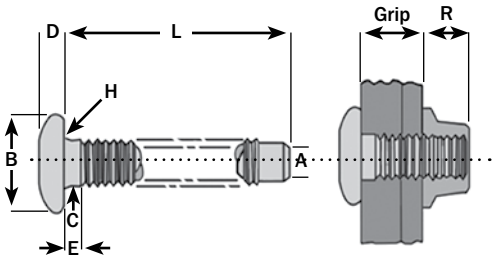

Pin: Medium Carbon, High Manganese Steel
Collar: Low Carbon Steel (zinc plated & passivated)

Nom Size (mm)	Part No.	Grip Range		'L' Dia.		'E'	'A' Dia.		'B'	'D'		'H'	'R'	'C' Ref		Box Qty (1000)	Box wgt. (kg)
		min	max	min	max	ref	min	max	max	min	max	rad	max	max			
4.8	AV1901/0610	1.6	15.9	47.6	48.3	2.3	4.65	4.72	10.00	3.05	3.38	0.05	8.7	4.65	4.72	1.5	10.2
	AV1901/0620	7.9	31.7	63.5	64.1	8.4	4.65	4.72	10.00	3.05	3.38	0.05	8.7	4.65	4.72	2	17.6
6.4	AV1901/0810	1.6	15.9	52.0	53.2	2.2	6.25	6.33	13.30	3.68	4.12	0.05	11.5	6.40	6.53	1	13.0
	AV1901/0820	7.9	31.7	68.3	69.1	9.1	6.25	6.33	13.30	3.68	4.12	0.05	11.5	6.40	6.53	1	17.0

Maxlok Bolts – 1902 Series
90° Countersunk Head

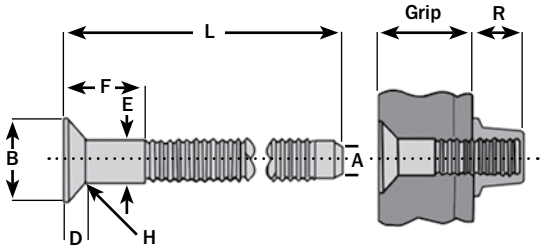

Pin: Medium Carbon, High Manganese Steel
Collar: Low Carbon Steel (zinc plated & passivated)

Nom Size (mm)	Part No.	Grip Range		'A' Dia.		'B' Dia.		'D'	'H'	'E' Dia.		'L'		'F'	Box Qty (1000)	Box wgt. (kg)
		min	max	min	max	min	max	nom	rad	min	max	min	max			
4.8	AV1902/0610	2.4	15.9	4.65	4.72	8.38	8.84	2.16	0.38	4.65	4.72	49.6	50.3	4.3	3	17.7
	AV1902/0620	7.9	31.7	4.65	4.72	8.38	8.84	2.16	0.38	4.65	4.72	64.5	65.1	9.4	1.5	11.7

Commercial Body Fittings
reserve the right to alter and amend product specifications without prior notice.

All specifications, weights and dimensions printed in this catalogue are intended as a guide only

Any fixings therefore should not be determined until relevant goods are received on site.

RIVETS & FASTENERS

Avdel®

Maxlok Bolts – 1903 Series
Mushroom Head

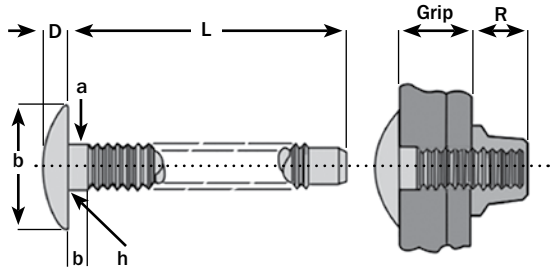

Pin: Medium Carbon, High Manganese Steel
Collar: Low Carbon Steel (zinc plated & passivated)

Nom Size (mm)	Part No.	Grip Range		'L' Dia.		'b'	'A' Ref		'B'	'D'		'H'	'R'	'a' Ref		Box Qty (1000)	Box wgt. (kg)
		min	max	min	max	Ref	min	max	max	min	max	rad	max	max			
4.8	AV1903/0610	1.6	15.9	47.6	48.3	2.3	4.65	4.72	12.45	2.54	2.79	0.05	8.7	4.65	4.72	1	7.0
	AV1903/0620	7.9	31.7	63.5	64.1	8.4	4.65	4.72	12.45	2.54	2.79	0.05	8.7	4.65	4.72	1.5	13.2
6.4	AV1903/0810	1.6	15.9	52.4	53.2	2.2	6.25	6.33	16.66	2.92	3.17	0.05	12.7	6.40	6.53	.500	6.6
	AV1903/0820	7.9	31.7	68.3	68.3	9.1	6.25	6.33	16.66	2.92	3.17	0.05	12.7	6.40	6.53	1	17.6

Maxlok Flanged Collars – 1981 Series
To Suit 1901, 1902, 1903, 1905 Series

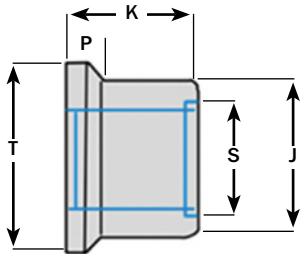

Nom Size (mm)	Part No.	'J'		'K'		'P' Ref		'S'		'T'		Box Qty (1000)	Box wgt. (kg)
		min	max	min	max	min	max	min	max	min	max		
4.8	AV1981/0600	7.77	7.85	7.21	7.47	1.44	1.70	4.85	4.96	9.65	10.03	7	13.3
6.4	AV1981/0800	10.23	10.31	9.78	10.03	1.82	2.08	6.45	6.55	12.7	13.08	2	8.0

Welwyn Garden City tel +44 (0)1707 371161 fax +44 (0)1707 372603
Coseley tel +44 (0)121 520 0100 fax +44 (0)121 522 3889
website www.cbf.uk.com e-mail: sales@cbf.uk.com

RIVETS & FASTENERS

Monobolt

A high performance flush break fastener designed to build-in strength, security, quality and cost saving benefits for the most demanding assembly requirements

Monobolt – 2711 Series
Protruding Head

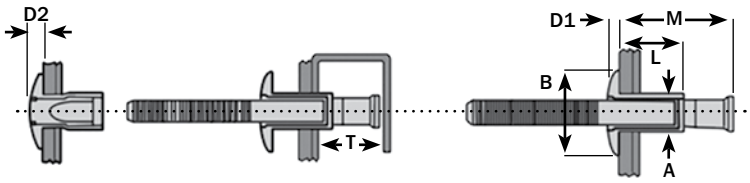

Limited Rear Clearance

No Rear Obstruction

Body & Stem: Austenitic stainless steel modified by addition of 3%-4% copper

'T' is the minimum clearance behind sheet to any obstruction 'A' is over uncrimped portion of body

Nom Size (mm)	Part No.	Grip Range		'A' Dia.		'B'		'D1'		'D2'	'L'		'M'	'T'	Box Qty (1000)	Box wgt. (kg)
		min	max	min	max	min	max	min	max	max	min	max	max	min		
4.76	AV2711/0613	1.63	6.86	4.75	4.81	9.53	10.03	1.70	2.10	1.85	10.19	10.94	19.18	10.41	4	10.0
	AV2711/0617	1.63	11.10	4.75	4.81	9.53	10.03	1.70	2.10	1.85	13.36	14.12	24.44	13.46	3	13.8
6.35	AV2711/0817	2.03	9.53	6.45	6.50	12.83	13.33	2.44	2.89	2.64	13.82	14.63	23.70	12.19	2	17.4
	AV2711/0824	2.03	15.87	6.45	6.50	12.83	13.33	2.44	2.89	2.64	18.90	19.71	32.92	16.38	1.5	15.3

Monobolt – 2761 Series
Countersunk Head

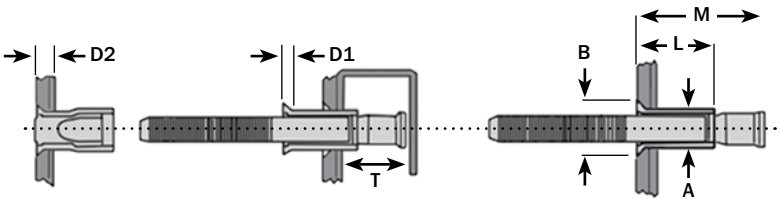

Limited Rear Clearance

No Rear Obstruction

Body: Carbon Steel (zinc plated)
Stem: Carbon Steel (zinc plated clear trivalent passivated)

'T' is the minimum clearance behind sheet to any obstruction
'A' is over uncrimped portion of body

Nom Size (mm)	Part No.	Grip Range		'A' Dia.		'B'	'D1'		'D2'	'L'		'M'	'T'	Box Qty (1000)	Box wgt. (kg)
		min	max	min	max	min	min	max	max	min	max	max	min		
6.35	AV2761/0821	3.17	12.07	6.45	6.50	10.03	1.90	2.36	2.11	16.51	17.27	27.15	12.95	1.5	15.9

Welwyn Garden City tel +44 (0)1707 371161 fax +44 (0)1707 372603
Coseley tel +44 (0)121 520 0100 fax +44 (0)121 522 3889
website www.cbf.uk.com e-mail: sales@cbf.uk.com

RIVETS & FASTENERS

Avdel®

Monobolt – 2771 Series
Protruding Head

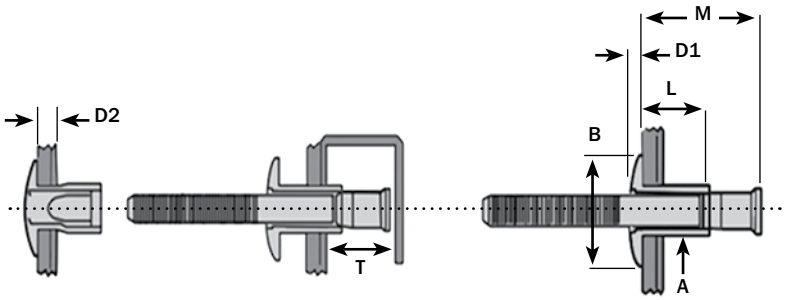

Limited Rear Clearance

No Rear Obstruction

Body: Carbon Steel (zinc plated)
Stem: Carbon Steel (zinc plated clear trivalent passivated)

'T' is the minimum clearance behind sheet to any obstruction
'A' is over un-crimped portion of body

Nom Size (mm)	Part No.	Grip Range		'A' Dia.		'B'		'D1'		'D2'	'L'		'M'	'T'	Box Qty (1000)	Box wgt. (kg)
		min	max	min	max	min	max	min	max	max	min	max	max	min		
4.76	AV2771/0613	1.63	6.86	4.76	4.84	9.53	10.03	1.70	2.10	1.85	10.19	10.94	18.19	10.41	4	15.3
	AV2771/0617	1.63	11.10	4.76	4.84	9.53	10.03	1.70	2.10	1.85	13.36	14.12	24.44	13.46	3	13.3
6.35	AV2771/0817	2.03	9.53	6.47	6.53	12.83	13.33	2.44	2.89	2.64	13.82	14.63	23.70	12.19	2	17.6
	AV2771/0824	2.03	15.87	6.47	6.53	12.83	13.33	2.44	2.89	2.64	18.90	19.71	32.92	16.38	1.5	15.9
9.60	AV2771/1228	3.04	15.88	9.68	9.89	19.00	20.3	3.66	4.06	3.96	22.6	22.9	236.2	22.2	.250	7.50

Hemlok – 2221 Series

A high performance fastener designed to meet the requirements of manufacturing industries using thin gauge back sheet materials in product assemblies.
Provides high strength and good clamp-up without deforming thin sheet metal.
The salient feature is the large load bearing tail formation

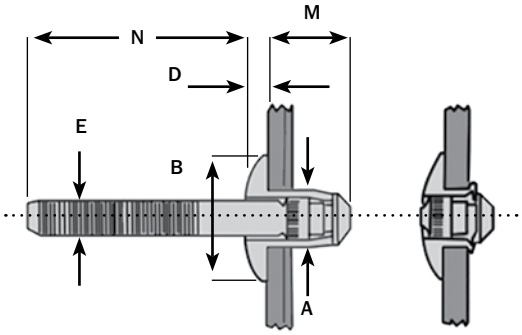

Body: Medium Carbon Steel
Stem: Carbon Boron Steel

Nom Size (mm)	Part No.	Grip Range		'A' Dia.		'B' Ref		'D'		'E'	'M'		'N'	Box Qty (1000)	Box wgt. (kg)
		min	max	min	max	min	max	min	max	max	min	max	max		
6.35	AV2221/0812	1.50	3.50	6.454	6.554	12.77	13.39	2.41	2.67	4.27	12.39	13.70	29.9	2	16.0
	AV2221/0813	2.80	4.80	6.454	6.554	12.77	13.39	2.41	2.67	4.27	13.69	14.99	29.9	2	16.0
	AV2221/0815	4.80	6.80	6.454	6.554	12.77	13.39	2.41	2.67	4.27	15.69	17.00	29.9	1	8.6
	AV2221/0817	6.80	8.80	6.454	6.554	12.77	13.39	2.41	2.67	4.27	17.67	18.98	29.9	2	18.4
	AV2221/0819	8.80	10.80	6.454	6.554	12.77	13.39	2.41	2.67	4.27	19.68	20.99	29.9	2	19.0
	AV2221/0821	10.80	12.80	6.454	6.554	12.77	13.39	2.41	2.67	4.27	21.69	22.99	29.9	1	10.0

Welwyn Garden City tel +44 (0)1707 371161 fax +44 (0)1707 372603
Coseley tel +44 (0)121 520 0100 fax +44 (0)121 522 3889
website www.cbf.uk.com e-mail: sales@cbf.uk.com

RIVETS & FASTENERS

GRIP-TAINER

The high strength GRIP-TAINER® system is designed to improve the assembly of commercial vehicle bodies. The GRIP-TAINER® is ideally suited for the plastic honeycomb panel, as the clamp force can be controlled, unlike break-loaded fasteners. They are removable, re-usable, sealed and come with a high grade plating specification.

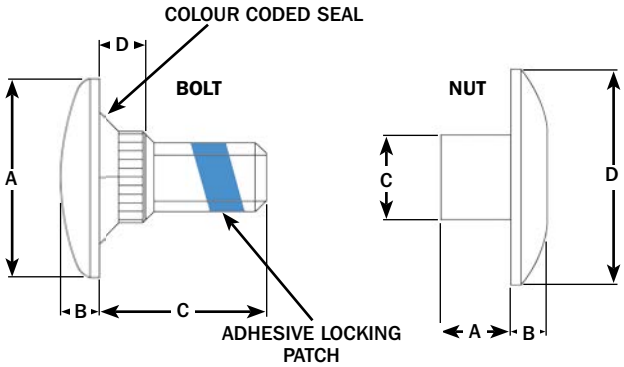

- Fully sealed
- Controlled clamp
- No expensive tooling required
- No waste material
- Re-usable
- High speed placing
- Colour coded seals
- Can be supplied with plastic encapsulated heads
- Robust plating
- Low profile
- Tamperproof

Grip range can be achieved by using the corresponding adjacent nut.
i.e.
GT1B/BLK + GTN1/ZP
=
17.90 min / 19.70 max grip range

Technical Information:

Recommended hole size:	10.3mm
Thread:	5/16 UNC
Shear strength:	14Kn
Tensile strength	20Kn
Recommended assembly torque:	17-20Kn
Drive bit:	T55

BOLT
Part Number & Dimensions

Part No.	Grip Range min	Grip Range max	A	B	C	D	Box Qty (1000)	Box wgt. (kg)	Seal Colour
GT00B/BRN	13.00	14.90	23.10	5.08	14.00	5.50	0.100	1.33	
GT0B/WHT	14.50	15.60	23.10	5.08	16.00	5.50	0.100	1.40	
GT0B/WHT	14.50	17.40	23.10	5.08	16.00	5.50	0.100	1.40	
GT0B/WHT	18.50	20.50	23.10	5.08	16.00	5.50	0.100	1.40	
GT1B/BLK	17.90	19.70	23.10	5.08	19.05	6.60	0.100	1.53	
GT1B/BLK	20.00	23.50	23.10	5.08	19.05	6.60	0.100	1.53	
GT2B/BLU	21.30	23.10	23.10	5.08	22.20	6.60	0.100	1.61	
GT2B/BLU	20.60	25.60	23.10	5.08	22.20	6.60	0.100	1.61	
GT2B/BLU	23.20	27.20	23.10	5.08	22.20	6.60	0.100	1.61	
GT3B/YEL	24.50	25.90	23.10	5.08	25.40	9.50	0.100	1.78	
GT3B/YEL	24.50	28.70	23.10	5.08	25.40	9.50	0.100	1.78	
GT3B/YEL	25.80	30.40	23.10	5.08	25.40	9.50	0.100	1.78	
GT4B/RED	31.20	32.60	23.10	5.08	31.75	9.50	0.100	1.96	
GT4B/RED	31.20	34.20	23.10	5.08	31.75	9.50	0.100	1.96	
GT4B/RED	31.20	36.50	23.10	5.08	31.75	9.50	0.100	1.96	
GT4B/RED	35.80	42.50	23.10	5.08	31.75	9.50	0.100	1.96	
GT5B/GRN	37.70	40.30	23.10	5.08	38.50	12.30	0.100	2.40	
GT5B/GRN	37.70	43.20	23.10	5.08	38.50	12.30	0.100	2.40	
GT5B/GRN	39.40	50.30	23.10	5.08	38.50	12.30	0.100	2.40	

Corresponding NUT
Part Number & Dimensions

Part No.	C	B	A	D	Box Qty (1000)	Box wgt. (kg)
GTN0/ZP	9.85	3.94	7.00	25.40	0.100	1.34
GTN0/ZP	9.85	3.94	7.00	25.40	0.100	1.34
GTN1/ZP	9.85	3.94	9.52	25.40	0.100	1.38
GTN2/ZP	9.85	3.94	12.70	25.40	0.100	1.47
GTN1/ZP	9.85	3.94	9.52	25.40	0.100	1.38
GTN2/ZP	9.85	3.94	12.70	25.40	0.100	1.47
GTN1/ZP	9.85	3.94	9.52	25.40	0.100	1.38
GTN2/ZP	9.85	3.94	12.70	25.40	0.100	1.47
GTN3/ZP	9.85	3.94	15.87	25.40	0.100	1.55
GTN1/ZP	9.85	3.94	9.52	25.40	0.100	1.38
GTN2/ZP	9.85	3.94	12.70	25.40	0.100	1.47
GTN3/ZP	9.85	3.94	15.87	25.40	0.100	1.55
GTN1/ZP	9.85	3.94	9.52	25.40	0.100	1.38
GTN2/ZP	9.85	3.94	12.70	25.40	0.100	1.47
GTN3/ZP	9.85	3.94	15.87	25.40	0.100	1.55
GTN4/ZP	9.85	3.94	25.80	25.40	0.100	1.80
GTN2/ZP	9.85	3.94	12.70	25.40	0.100	1.47
GTN3/ZP	9.85	3.94	15.87	25.40	0.100	1.55
GTN4/ZP	9.85	3.94	25.80	25.40	0.100	1.80

RIVETS & FASTENERS

Lock Bolt
Multi-Grip

A high performance fastener designed to meet the requirements of manufacturing industries using thin gauge back sheet materials in product assemblies.
Provides high strength and good clamp-up without deforming thin sheet metal.
The salient feature is the large load bearing tail formation.

No. RAF/ARSM0803M8 Ø6.4mm Grip range: 3.2 - 8.0mm
wgt. 10.50kg/1000

No. RAF/ARSM0807M11 Ø6.4mm Grip range: 3.2 - 14.3mm
wgt. 11.26kg/1000

- Truss head
- Zinc / Clear passivate

Collar to suit

No. AV2662/0800 Avdelok full collar
- See page 184 for further information

Dome Head Rivets
Long Grip-Range

Most versatile type of head, it retains enough bearing surface to retain all kinds of materials (except those extremely smooth and brittle)

Body: Aluminium Al Mg 3,5
Mandrel: Steel Zinc plated

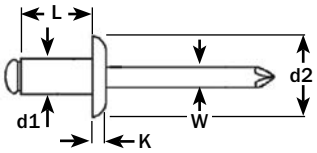

- Wide and extended grip range
- Fast installation from one side of the work-piece
- Good hole fill
- Steel versions available to order

d1 Nom Size (mm)	Part No.	Grip Range min	Grip Range max	d2 mm	K mm	W Ø mm	L nominal mm	Box Quantity	Weight per 1000 (kg)	Drill Ø mm
4.8	FASTBR0101/4824	17.0	20.0	9.5	1.5	2.65	24.0	200	3.99	4.9
	FASTBR0101/4827	20.0	23.0	9.5	1.5	2.65	27.0	200	4.06	4.9
	FASTBR0101/4830	23.0	25.0	9.5	1.5	2.65	30.0	200	4.09	4.9
	FASTBR0101/4832	25.0	27.0	9.5	1.5	2.65	32.0	150	4.28	4.9
	FASTBR0101/4835	27.0	30.0	9.5	1.5	2.65	35.0	150	4.55	4.9
	FASTBR0101/4840	30.0	35.0	9.5	1.5	2.65	40.0	150	4.60	4.9
	FASTBR0101/4845	35.0	40.0	9.5	1.5	2.65	45.0	100	5.12	4.9
	FASTBR0101/4850	40.0	45.0	9.5	1.5	2.65	50.0	100	5.42	4.9
6.4	FASTBR0101/6412	3.0	6.0	13.0	2.2	3.60	12.0	250	5.19	6.5
	FASTBR0101/6415	6.0	9.0	13.0	2.2	3.60	15.0	250	5.36	6.5
	FASTBR0101/6418	9.0	12.0	13.0	2.2	3.60	18.0	200	6.14	6.5
	FASTBR0101/6422	12.0	16.0	13.0	2.2	3.60	22.0	200	6.72	6.5
	FASTBR0101/6426	16.0	20.0	13.0	2.2	3.60	26.0	150	6.96	6.5
	FASTBR0101/6430	20.0	24.0	13.0	2.2	3.60	30.0	150	7.19	6.5
	FASTBR0101/6435	24.0	29.0	13.0	2.2	3.60	35.0	100	8.14	6.5
	FASTBR0101/6450	29.0	42.0	13.0	2.2	3.60	50.0	100	10.89	6.5

Welwyn Garden City tel +44 (0)1707 371161 fax +44 (0)1707 372603
Coseley tel +44 (0)121 520 0100 fax +44 (0)121 522 3889
website www.cbf.uk.com e-mail: sales@cbf.uk.com

RIVETING TOOLS

Avdel®

nGENESIS® Range
Robust Power Tools For Breakstem Fasteners

Avdel's nGenesis® tool range comprises of high performance, lightweight hydro-pneumatic handtools for breakstem rivets. The tough construction allows for swift placement whilst the light design reduces operator fatigue. With an increased lifespan and low air consumption the nGenesis tool range is fast becoming an invaluable tool in every assembly line. Available as standard with a fixed stem collector bottle

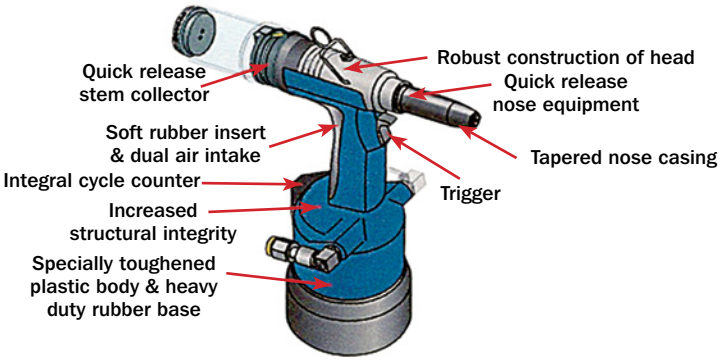

Features

- Lightweight tool
- Toughened plastic body and heavy duty rubber base
- Optional quick release or fixed stem collector bottle
- Vacuum air supply cut-off on trigger
- Enhanced tool life
- Soft rubber grip on handle
- Integral cycle counter (except nG 1 & nG2-S)
- nG1, and nG2-S feature a quick release nose assembly

Benefits

- Reduces operator fatigue
- High placement speed
- Robust tool
- Minimized air consumption
- Reduced time to empty stem collector
- Places a wide range of fasteners
- Ergonomic

Placing Matrix

nG1 Model

Fastener Type	Fastener Sizes						
	3.0	3.2	4.0	4.3	4.8	6.4	9.5
Avex	✔	✔	✔		✔		
Avinox		✔	✔				
Bulbex			✔		✔		
T-Lok				✔			
Sealed Rivet		✔	✔				
Stavex		✔	✔				
Avi-Bulb		✔	✔				

nG2 & nG2/S Models

Fastener Type	Fastener Sizes						
	3.0	3.2	4.0	4.3	4.8	6.4	9.5
Avex	✔	✔	✔		✔		
Avinox		✔	✔		✔		
Bulbex			✔		✔		
Monobolt					✔		
S R Rivet		✔	✔		✔		
T-Lok				✔	✔		
TLR					✔		
Avi-Bulb		✔	✔		✔		

nG4 Model

Fastener Type	Fastener Sizes						
	3.0	3.2	4.0	4.3	4.8	6.4	9.5
Avex					✔	✔	
Avdelok					✔	✔	
Avinox					✔		
Avtainer							✔
Bulbex					✔		
Hemlok						✔	
Maxlok					✔	✔	
Q-Rivet					✔	✔	
Stavex					✔	✔	
T-Lok				✔	✔		
TLR					✔		

nG3 Model

Fastener Type	Fastener Sizes						
	3.0	3.2	4.0	4.3	4.8	6.4	9.5
Avex	✔	✔	✔		✔	✔	
Avinox		✔	✔		✔		
Avtainer							✔
Bulbex			✔		✔		
Monobolt					✔	✔	
S R Rivet		✔	✔		✔	✔	
T-Lok				✔	✔		
TLR					✔	✔	
Interlock					✔	✔	
Stavex		✔	✔		✔		
Avi-Bulb					✔	✔	

RIVETING TOOLS

Avdel®

nG1

One of the lightest tools in the nGenesis range. With a quick cycle time and the ability to install a variety of rivets the nG1 offers invaluable multi-functionality whilst maintaining ease of use

No. AVNG1

- Weight (without nose assembly) 1.50kg
- Pull force @ 5.5 bar 6.0kN
- Cycle time (approx.) 0.9 sec
- Free air volume @ 5.5 bar 1.2 litres
- Vibration <2.5 m/s2
- Weight (min. with equip.) 1.70kg
- Stroke (min.) 14mm
- Air supply pressure 5-7 bar (80-100 psi)
- Noise level <75 dB(A)

Placing capability: Up to 4.8mm (3/16") aluminium rivets and up to 4.0mm (5/32") steel breakstem rivets produced by Avdel®. Can also place Avseal® II 4 and 5mm sealing plugs

Avdel®

nG2

Features the quickest cycle time in the nGenesis range. With an integral cycle counter and the ability to take a wide range of rivet sizes the nG2 is a valuable tool in the range

No. AVNG2

- Weight (without nose assembly) 1.98kg
- Pull force @ 5.5 bar 9.34 kN
- Cycle time (approx.) 0.8 sec
- Free air volume @ 5.5 bar 2.1 litres
- Weight (min. with assembly) 2.10kg
- Stroke (min.) 17mm
- Air supply pressure 5-7 bar (80-100 psi)
- Noise level <75 dB(A)

Placing capability: Up to 4.8mm (3/16") breakstem rivets produced by Avdel®. Can also place Avseal® II sealing plugs up to 7mm

Avdel®

nG3

Allows the placement of a large range of breakstem rivets, lockbolts and sealing plug sizes. With an intergrated counter this tool can be used for a variety of applications and enable you to keep track of your progress

No. AVNG3

- Weight (without nose assembly) 2.25kg
- Pull force @ 5.5 bar 12.9 kN
- Cycle time (approx.) 1.2 sec
- Free air volume @ 5.5 bar 4.3 litres
- Vibration <2.5 m/s2
- Weight (min. with assembly) 2.30kg
- Stroke (min.) 26mm
- Air supply pressure 5-7 bar (80-100 psi)
- Noise level <75 dB(A)

Placing capability: All breakstem rivets produced by Avdel up to 6.4mm (1/4") except Avibulb® 6.4mm (1/4") and Hemlok® structural fasteners. Can also place Avseal® II sealing plugs up to 9mm & Avtainer® lockbolts 10.0mm

Avdel®

nG4

Offers the capability to fit some of the larger rivets in Avdel's portfolio. Its ergonomic design and reinforced structure make the nG4 tool easy to use yet tough enough to endure any assembly line

No. AVNG4

- Weight (without nose assembly) 2.28kg
- Pull force @ 5.5 bar 18.68 kN
- Cycle time (approx.) 1.2 sec
- Free air volume @ 5.5 bar 4.3 litres
- Vibration <2.5 m/s2
- Weight (min. with equip.) 2.30kg
- Stroke (min.) 17mm
- Air supply pressure 5-7 bar (80-100 psi)
- Noise level <75 dB(A)

Placing capability: Up to 6.4mm (1/4") breakstem rivets produced by Avdel except Interlock® & Monobolt® structural rivets. Can also place Avseal® II sealing plugs up to 12mm, Avtainer® lockbolts 10mm (3/8"), Avdelok® & Maxlok® lockbolts 4.8mm (3/16") & 6.4mm (1/4"), Hemlok® structural rivets 6.4mm (1/4")

Welwyn Garden City tel +44 (0)1707 371161 fax +44 (0)1707 372603
Coseley tel +44 (0)121 520 0100 fax +44 (0)121 522 3889
website www.cbf.uk.com e-mail: sales@cbf.uk.com

RIVETING TOOLS

Avdel®

722 Hydro Pneumatic Power Tool
Heavy Duty, Cast Aluminium Body

A power tool capable of withstanding the toughest production lines. The 722 series has been designed to be quick to use and operator friendly, reducing fatigue whilst installing an assortment of fastenings.

No. AV722/AL

- Weight (without nose equip.) 5.0kg
- Stroke 19mm
- Overall height 387mm
- Free air volume 14.6 litres
- Overall width base & air supply hose 146mm
- Pull force – 26.7kN
- Cycle time (approx.) 3 sec
- Length without nose equip, 213mm
- Noise level dB(A) 72

Placing Matrix				
722 Tool				
Fastener Type	Fastener Sizes			
	4.8	6.4	8.0	9.5
Avdelok	✔	✔	✔	✔
Monobolt				✔

Cast aluminium tool body for heavy duty use over long periods of time. Quick and simple to operate, minimising operator fatigue and reducing assembly time. Wide choice of nose assemblies to suit varying application requirements including softer materials and wood.
Places Avdelok® structural lockbolts from 4.8mm (3/16") to 9.6mm (3/8") and 9.6mm (3/8") Monobolts®

'Lazy-Tong' Rivet Tool

No. BM67/02BM00670
wgt. 1.90kg

Rivet Ø (mm)	Materials			
	Aluminium	Steel	Inox	Copper
3.0	✔	✔	✔	✔
3.2	✔	✔	✔	✔
4.0	✔	✔	✔	✔
4.8	✔	✔	✔	✔
5.0	✔	✔	✔	
6.0	✔	✔	*	
6.4	✔	*	*	

**Requires additional nosepiece*

- Extra long nose for access in hard-to-reach riveting places
- Extension type tool that gives the possibility to set blind rivets using only one hand
- Main body and handle manufactured in a high density aluminium casting
- Comfortable handle for better riveting
- Supplied with additional nosepieces located in the handle
- Length closed: 300mm
- Length open: 755mm
- Stroke: 8mm
- Capacity: Up to 6.4mm

'Long-Arm' Rivet Tool

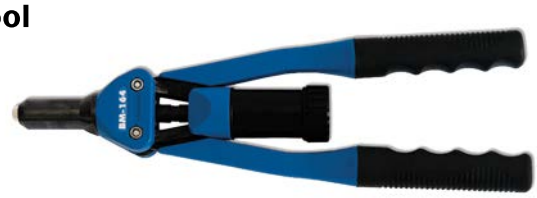

Rivet Ø (mm)	Materials			
	Aluminium	Steel	Inox	Copper
4.8	✔	✔	✔	✔
5.0	✔	✔	✔	✔
6.0	✔	✔	✔	
6.4	✔	✔	✔	
6.5 Structural	**	**	**	
5.2 s-Trebol	*			
6.4 s-Trebol	*			
7.7 s-Trebol	**			

**Requires additional nosepiece*
***Requires additional nosepiece and jaws*

No. BM164/02BM01642
wgt. 1.42kg

- Main body manufactured in a high density aluminium casting
- Comfortable and ergonomic handles
- Mandrel collector that contributes to the cleanliness and safety of the working area
- Powerful, safe and durable tool
- Supplied with additional nosepieces
- Complete with plastic storage box
- Length: 405mm
- Stroke: 10mm
- Capacity: Up to 6.5mm structural and 7.7 s-Trebol

SAFETY – CAMERA SYSTEMS

Backeye® 360

BRIGADE

4 CAMERAS
1 IMAGE
0 BLIND SPOTS

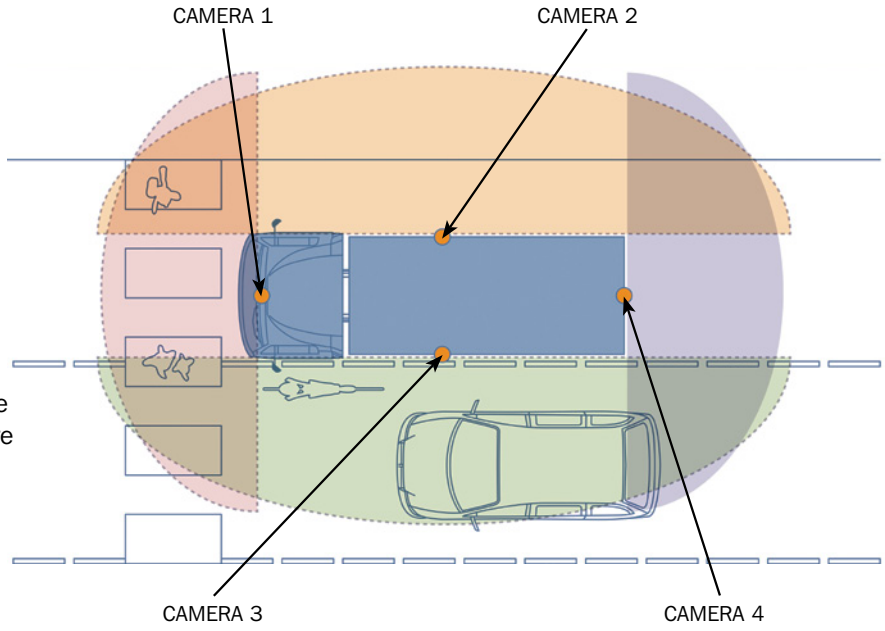

Backeye® 360 is an intelligent camera monitor system designed to assist low-speed manoeuvrability by providing the driver with a real-time complete surround view of the vehicle in a single image.

Ultra wide-angle cameras mounted on the front, sides and rear of the vehicle capture the surrounding areas of the vehicle including all blind spots. Simultaneous digital images from these cameras are then processed and 'video-stitched' resulting in 360° bird's-eye view within a single image. This gives the driver or operator a quick and easy understanding of any potential hazard. The software also instantly eliminates any fisheye camera distortion delivering a clear, real-time picture on the driver's monitor.

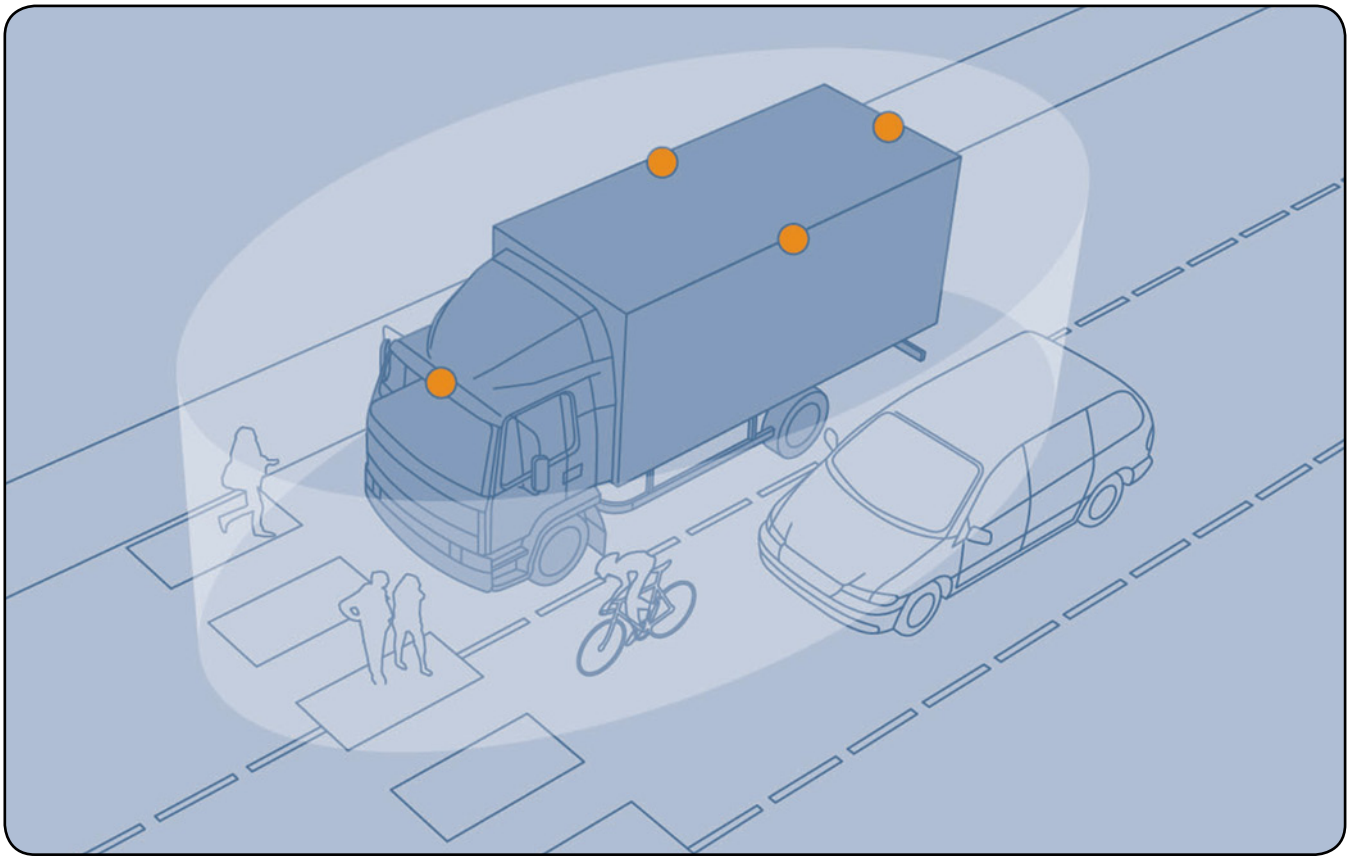

Welwyn Garden City tel +44 (0)1707 371161 fax +44 (0)1707 372603
Coseley tel +44 (0)121 520 0100 fax +44 (0)121 522 3889
website www.cbf.uk.com e-mail: sales@cbf.uk.com

SAFETY – CAMERA SYSTEMS

7"

Backeye® 360
SELECT SERIES

BRIGADE

The Backeye® 360 Select is a bird's-eye camera monitor system suitable for standard on-road vehicles that do not require bespoke configuration.

- Four wide-angle camera lenses cover the entire vehicle perimeter and surroundings, including all blind spots
- Real-time video output
- Triggered views (rear, left & right) e.g. selecting reverse gear highlights rear view image
- Split-screen monitor view
- Configurable viewing distance to suit vehicle type and application
- Customisable on-screen vehicle icon and livery so the driver sees a recognisable vehicle on the monitor
- On-screen distance markers on rear view
- Reduces collisions with people and objects
- One view to see all surrounding areas
- No blind spots

No. LTMSSE/770D/100DV Complete camera system
wgt. 4.70kg

- System consists of: 4 x BN360/000
  Wide angle cameras
  Size: W35 x H60 x D45mm
  4 x BN360/000
  Electronic Control Units (ECU)
  Size: W170 x H126 x D36mm
  1 x VBV/770DM
  7" Monitor
  Size: W180 x H122 x D27mm
- Cables supplied separately dependant on vehicle size (see page 199)

7" VBV/770DM Monitor

Features

- 12-24Vdc
- 360° Single image
- Triggered views (rear, left & right)
- 4 x (IPX7) Ultra-wide viewing angle cameras (HxV) 185° x 142°
- 1/3.6" CMOS sensor
- TV System: NTSC
- 2 Year warranty

BN360/000 Wide-Angle Camera

Power

- Power consumption: 15 Watts
- Current: 1.23 Amps

BN360/000 ECU

Durability and Standards

- Mechanical vibration: 1G
- Operating temperature: -30°C to +75°C
- CE Marked
- EMC Apprved: E
- HALT Tested

SAFETY – CAMERA SYSTEMS

Side-Scan Ultrasonic Detection System
Suited to Rigid Vehicles

BRIGADE

4 Sensor system fitted to the side of a vehicle, increasing safety when turning or low speed manoeuvering. Particularly relevant to near-side blind spot where cyclists or pedestrians can otherwise go undetected. The driver is warned by a cab mounted audible distance warning buzzer.

No. LTMSSS/4000W/DV Complete side-scan system
wgt. 1.44kg

- Each system consists of: 4 x Sensors
  1 x Buzzer
  4 x 0° Flush mount fixings
  4 x 11° Flush mounting fixings
  4 x Underslung fixings
  1 x Waterproof control box
  1 x 10m Buzzer cable
  4 x 4.5m Sensor cables
  2 x 2.5m Extension cables
- 4 Sensor system
- 12-24 Vdc
- 1.0/1.5m Detection range – (selectable via dip-switch)
- Audible distance warning
- Underslung and flush-mount fixings included
- 2 Levels of sensitivity – (selectable via dip-switch)
- 2 Year warranty

Various additions are available for articulated vehicles. Details available upon request

Features

- Obstacles detected in under 200 milliseconds
- Environment Learning Mode prevents false alarms from ancillary equipment that intrudes in the first 100cm of the detection zone
- Self-diagnostic function

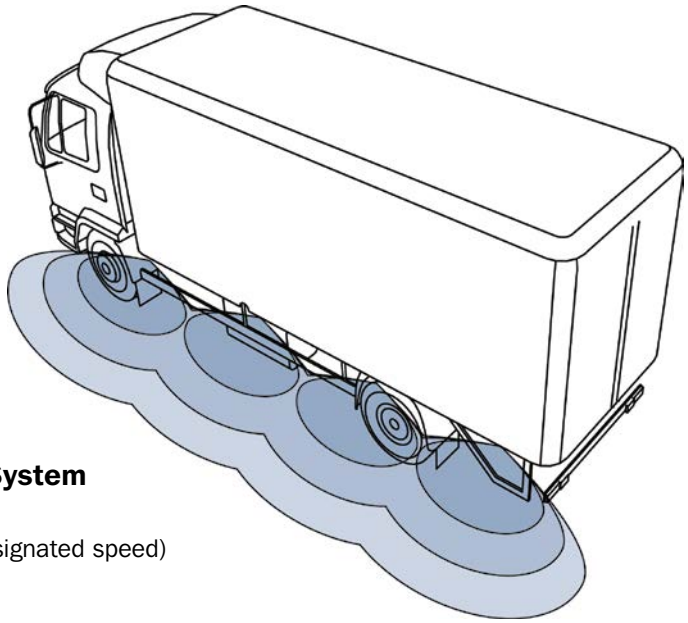

Durability and Standards

- Operating temperature: -40°C to +80°C
- Waterproof sensors to IP68
- Waterproof control box to IP69K
- CE Marked
- EMC Approved: E

Additional Hardware to Upgrade / Enhance System

No. LTMSLS/20/A
Low speed trigger module (enables sensors below a designated speed)

No. LTMSTS/001/ECU
Turn indicator trigger for system activation

Optional Extra

No. LTMSSS/BC/08/DV
Backchat speaking alarm with side-turn warning for cyclists/pedestrians

LTMSLS/20/A
Trigger module

LTMSTS/001/ECU
Turn indicator trigger

LTMSSS/BC/08/DV
Backchat speaking alarm

Welwyn Garden City tel +44 (0)1707 371161 fax +44 (0)1707 372603
Coseley tel +44 (0)121 520 0100 fax +44 (0)121 522 3889
website www.cbf.uk.com e-mail: sales@cbf.uk.com

SAFETY – CAMERA SYSTEMS

Back-Scan Ultrasonic Detection System
Suited to Rigid Vehicles

BRIGADE

4 Sensor system fitted to the rear of a vehicle, as an invaluable aid to safe reversing. Gives greater protection to pedestrians and workers, whilst minimising damage to the vehicle and other objects. Driver is warned by a cab mounted visual and audible distance warning display unit.

No. LTMSBS/4000W/DV Complete back-scan system
wgt. 1.34kg

- Each system consists of: 4 x Sensors
  1 x Visual and audible display
  4 x 0° Flush mount fixings
  4 x 11° Flush mounting fixings
  4 x Underslung fixings
  1 x Waterproof control box
  1 x 15m Display cable
  4 x 2.5m Sensor cables
- 4 Sensor system
- 12-24 Vdc
- 2.5m Detection range – outer sensors 2.5m/0.6m (selectable via dip-switch)
- Graduated visual and audible distance warning display
- Underslung and flush-mount fixings included
- 50cm Compensation range for sensors fitted inboard of vehicle rear – (selectable via dip-switch)
- 2 Year warranty

Various additions are available for articulated vehicles. Details available upon request

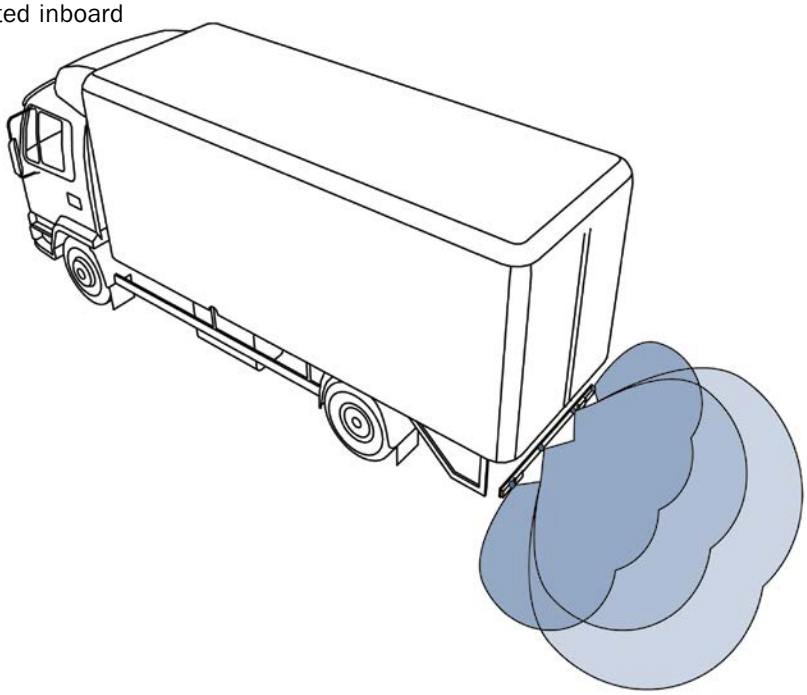

Features

- Obstacles detected in under 200 milliseconds
- Environment Learning Mode prevents false alarms from tow hooks and other ancillary equipment that intrudes in the first 100cm of the detection zone
- Self-diagnostic function
- 1.5m Detection range also available – ***Please contact us for more details***

Durability and Standards

- Operating temperature: -40°C to +80°C
- Waterproof sensors to IP68
- Waterproof control box to IP69K
- CE Marked
- EMC Approved: E

A full range of electrical components can be found on
P58-95

P58-62

P91-93

P88

SAFETY – CAMERA SYSTEMS

BBS-TEK® white sound®

noise abatement society

The safest alarms in the world due to their instant locatability and directional sound. The multi-frequency alarms are only heard in the danger zone, thus eliminating noise nuisance for local residents.

BBS-TEK® smart reversing alarms

Continually adjust to 5-10 decibels above ambient, so ideal in varying noise level environments.

BBS-TEK® White Sound Reversing Alarm

BRIGADE

No. LTMS/BBS87/DV 87 Decibels
wgt. 0.19kg Size: W105 x H65 x D32mm

No. LTMS/BBS92/DV 92 Decibels
wgt. 0.21kg Size: W105 x H65 x D37mm

- 12-24Vdc
- IP68 Rated
- Lifetime warranty

Features
- Multi-frequency broadband sound
- Instantly locatable
- Sound confined to danger area
- Eliminates noise nuisance
- Sounder unit: Speaker
- Hole centres: 76mm

Power
- Current: Max 0.5 Amps

Durability and Standards
- Mechanical vibration: 10G
- Operating temperature: -40°C to +85°C
- CE Marked
- EMC Approved: E
- SAE J994

BBS-TEK® White Sound Reversing Alarm
Self-Adjusting

BRIGADE

No. LTMSSA/BBS97/DV 77-97 Decibels
wgt. 0.40kg Size: W127 x H76 x D65mm

- 12-24Vdc
- IP68 Rated
- Lifetime warranty

Features
- Alarm continually adjusts to 5-10dB above ambient
- Multi-frequency white sound alarm
- Instantly locatable
- Sound confined to danger area
- Eliminates noise nuisance
- Sounder unit: Driver
- Hole centres: 98-108mm

Power
- Current: Max 1 Amps

Durability and Standards
- Mechanical vibration: 10G
- Operating temperature: -40°C to +85°C
- CE Marked
- SAE J994
- NAS/PIEK approved for night-time delivery

BACKCHAT Speaking Alarm
"Ssh! Stand well clear, vehicle reversing..."

BRIGADE

No. LTMSBC/01/DV 90 Decibels
wgt. 0.50kg Size: W122 x H84 x D50mm

- 12-24Vdc
- IP68 Rated
- 2 Year warranty

Features
- Real speech alarm "Ssh! Stand well clear, vehicle reversing..."
- Bespoke message available: up to 8 seconds,under 4 seconds for best speech quality
- Sounder unit: Speaker
- Hole centres: 102mm

Power
- Current: Max 0.5 Amps

Durability and Standards
- CE Marked
- EMC Apprved: E

Welwyn Garden City tel +44 (0)1707 371161 fax +44 (0)1707 372603
Coseley tel +44 (0)121 520 0100 fax +44 (0)121 522 3889
website www.cbf.uk.com e-mail: sales@cbf.uk.com

SAFETY – CAMERA SYSTEMS

7"

BRIGADE

Camera Monitor System
Single Camera Monitor System for Rigid Vehicles
SELECT SERIES

No. LTMSVBV/770D/000DV
wgt. 3.10kg
- Kit consists of: 1 x VBV/770DM - Monitor
  1 x VBV/700C - Camera
  1 x VBV/L420 - 20m Cable
- 2 Year warranty

Monitor
- 12-24Vdc
- 3 Camera inputs
- Size: W182 x H122 x D27mm

Camera
- Viewing angle (HxVxD) 92° x 70° x 115°
- IP67 Rated
- Size: W81 x H77 x D70mm

5"

BRIGADE

Camera Monitor System
Single & Twin Camera Monitor System for Vans & Small Rigid Vehicles
SELECT SERIES

No. LTMSVBV/750D/000DV Single camera system
wgt. 2.50kg
- Kit consists of: 1 x VBV/750DM - Monitor, 1 x VBV/700C – Camera, 1 x VBV/L420 – 20m Cable

No. LTMSVBV/750D/002DV Twin camera system
wgt. 3.00kg
- Kit consists of: 1 x VBV/750DM - Monitor, 2 x VBV/700C – Camera's,
  1 x VBV/L420 – 20m Cable, 1 x VBV/L405 – 5m cable
- 2 Year warranty

Monitor
- 12-24Vdc
- 3 Camera inputs
- Size: W148 x H110 x D30mm

Camera
- Viewing angle (HxVxD) 92° x 70° x 115°
- IP67 Rated
- Size: W81 x H77 x D70mm

BRIGADE

Select Camera
Bracket Mounted
SELECT SERIES

No. LTMSVBV/700C/DV
wgt. 0.36kg
- Replacement or additional camera to suit the following camera monitor systems:
  LTMSVBV/770D/000DV, LTMSVBV/750D/000DV, LTMSVBV/750D/002DV
- Viewing angle (HxVxD) 92° x 70° x 115°
- Size: W81 x H77 x D70mm
- 2 Year warranty

Features
- 1/3" Sharp CCD
- TV System: PAL
- TV Lines: 420
- 18 Infrared LED's for ultra-low light
- Audio
- Day / Night sensor
- Mirror view

Power
- Power consumption: 2.4 Watts
- Current: 0.2 Amps

Durability and Standards
- Mechanical vibration: 10G
- Mechanical shock: 100G
- Operating temperature: -20°C to +70°C
- CE Marked
- EMC Approved: E
- HALT Tested

BRIGADE

Camera Cable
SELECT SERIES

No. LTMSVBV/L405 5 Metre
wgt. 0.36kg
No. LTMSVBV/L410 10 Metre
wgt. 0.70kg
No. LTMSVBV/L420 20 Metre
wgt. 1.35kg

- Suitable for use with all **SELECT SERIES** camera monitor systems (See page 201 for adapter cables)
- Other cables available upon request

SAFETY – CAMERA SYSTEMS

Elite Camera
Flush 'Side' Mounted
ELITE SERIES

BRIGADE

For use with all Brigade camera monitor systems. Adapter cables may be required (P201)

No. LTMSBE/305C/LHDV Left-side view (Nearside)

No. LTMSBE/306C/RHDV Right-side view (Offside)

wgt. 0.38kg

- Viewing angle (HxVxD) 95° x 72° x 125°
- Size: W50 x H45 x D65mm
- 3 Year warranty
- Adjustable lens

Features
- 1/3" Sony CCD
- TV System: PAL
- TV Lines: 420
- Normal image

Power
- Power consumption: 1.2 Watts
- Current: 0.1 Amps

Durability and Standards
- Mechanical vibration: 20G
- Operating temperature: -30°C to +80°C
- CE Marked
- R46 and 2003/97/EC approved for indirect vision (with compliant monitors only)

Optional Extra
No. LTMSWE/3XX/15
Angled surface mounting adapter
- Adds 15°

Elite Mini Camera
Bracket Mounted – Forward Facing
ELITE SERIES

BRIGADE

For use with all Brigade camera monitor systems. Adapter cables may be required (P201)

No. LTMSBE/822C/DV
wgt. 0.20kg
- Size: W47 x H40 x D50mm
- 3 Year warranty
- Viewing angle (HxVxD) 111° x 87° x 129°

Features
- 1/4" Sony CCD
- TV System: PAL
- TV Lines: 380
- Normal image

Power
- Power consumption: 1.5 Watts
- Current: 0.1 Amps

Durability and Standards
- Mechanical vibration: 10G
- Mechanical shock: 100G
- Operating temperature: -20°C to +70°C
- CE Marked
- EMC Apprved: E
- HALT Tested

P132-137

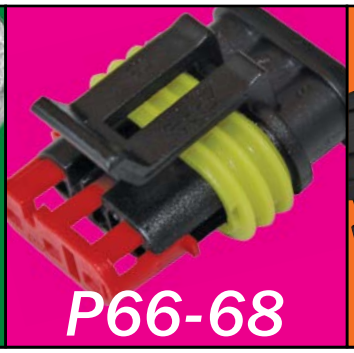
P66-68

P260-264

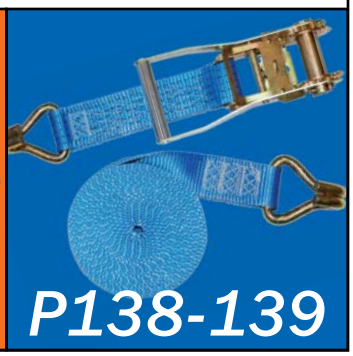
P138-139

Welwyn Garden City tel +44 (0)1707 371161 fax +44 (0)1707 372603
Coseley tel +44 (0)121 520 0100 fax +44 (0)121 522 3889
website www.cbf.uk.com e-mail: sales@cbf.uk.com

SAFETY – CAMERA SYSTEMS

Multi-Camera Module & Screen Splitter

BRIGADE

No. LTMSEDM/50/DV
wgt. 0.91kg

Size: W154 x H28 x D105mm

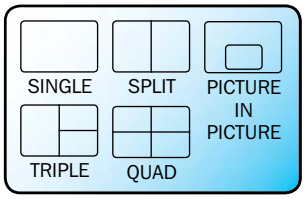

- 12-24Vdc
- 4 Camera inputs
- 2 Year warranty

Features

- Shutter camera compatible
- Tilt camera compatible
- AV Input to accept DVD, sat-nav or other add-ons
- 5 Manual or auto-triggers for each camera
- On screen distance markers
- Mirror / Normal image switch for each camera
- Selectable camera audio
- Auto-scanning function
- Compatible across Brigade camera monitor range (adapters required for SELECT Series)

Power

- Power consumption: 20 Watts

Durability and Standards

- Mechanical vibration: 5G
- Operating temperature: -25°C to +70°C
- CE Marked
- EMC Approved: E

'Wireless' Camera Monitor Connection System

BRIGADE

No. LTMSDW/1000TX/DV Digital wireless transmitter
wgt. 0.31kg Size: W113 x H114 x D31mm
No. LTMSDW/1000RX/DV Digital wireless receiver
wgt. 0.31kg Size: W113 x H114 x D31mm

- Compatible with the following camera monitor systems: **LTMSVBV/770D/000DV**, **LTMSVBV/750D/000DV**, **LTMSVBV/750D/002DV** *see page 199*
- 12-24Vdc
- 1 Camera input
- IP69K Rated (transmitter)
- 2 Year warranty

Features

- Image latency: 200 milliseconds
- Eliminates the need for retractable coiled cables
- Re-pair facility allows for interchangeable trailers
- Triggered by reverse gear
- TV system: PAL/NTSC
- Secure connection

Durability and Standards

- Mechanical vibration: 6G
- Mechanical shock: 20G
- Operating temperature: -40°C to +70°C
- CE Marked

Transmitter Receiver

Camera Monitor Adapter Cable

BRIGADE

LTMSAC/006

LTMSAC/007

No. LTMSAC/006
wgt. 0.04kg

- Connects **SELECT** Series camera to **ELITE** Series cable

No. LTMSAC/007
wgt. 0.03kg

- Connects **SELECT** Series monitor to **ELITE** Series cable
- Other cables available upon request

SAFETY – CAMERA SYSTEMS

Why fit a mobile digital recorder?

By recording footage from vehicle mounted cameras, mobile digital recording offers the solutions. It provides an accurate witness, giving irrefutable evidence in the case of false claims, crash for cash incidents or vandalism. Refuting these claims means companies can make major cost savings, whilst importantly supporting their drivers, who are often the subject of increased scrutiny.

- ✔ *Prevent false insurance claims such as 'crash for cash' scams*
- ✔ *Protection for drivers who may be wrongly accused*
- ✔ *Provides irrefutable evidence in the case of accidents and legal proceedings*
- ✔ *Encourages driver best practice, so less vehicle damage and accidents*
- ✔ *Enables more effective driver training*
- ✔ *Vandalism deterrent and perpetrator identification*
- ✔ *All of the above helps to lower insurance premiums*
- ✔ *Peace of mind for passengers and drivers*

BRIGADE

Event Recorder

Compact Mobile Digital Recording

A screen-mounted, high definition digital recorder for front view event capture. Continuous or event-triggered recordings are made to a lockable Micro SD card. A GPS receiver allows the location of events to be accurately monitored.
An optional second camera allows an additional view to be recorded.

No. LTMSEDR/101/008DV Complete recorder system
wgt. 0.32kg

- 12-24Vdc
- Kit consists of: 1 x HD Event recorder complete with wide angle camera
  Size: W85 x H50 x D19mm
  1 x GPS Antenna
  1 x Mounting bracket
  1 x Direct power cable
  1 x 8GB SD card & software CD

Features

- High definition video capture for clear incident recording
- Wide angle camera lens for maximum view
- Fast frame rate for smooth images
- 3 Recording modes:
  - **Normal**
  - **Event** – shock sensor enables 10 seconds before and after an event to be recorded
  - **Parking** – movement engages event recording as above
- Optional audio recording for additional event information
- Micro SD card (with locking option)
- GPS Module for location tracking
- Viewing software allows two cameras to be viewed, alongside speed, G-force levels and location
- Software allows still images (jpeg) to be created with embedded date and time
- Recording speed: Up to 30fps
- Camera: CMOS sensor
- Viewing angle (HxVxD) 100° x 85° x 120°
- Video resolution: HD & VGA,
  Front: 1280 x 720 pixels
  Aux: 640 x 480 pixels
- Viewing software: Compatible with Windows®
  from 98 to 7, links with Google maps
- 2 Year warranty

Event recorder c/w wide angle camera

Optional Extras

No. LTMSEDR/142C Additional camera
No. LTMSEDR/101LOCK SD Card lock

Additional camera

SD Card lock

Welwyn Garden City tel +44 (0)1707 371161 fax +44 (0)1707 372603
Coseley tel +44 (0)121 520 0100 fax +44 (0)121 522 3889
website www.cbf.uk.com e-mail: sales@cbf.uk.com

SAFETY – CAMERA SYSTEMS

Mobile Digital Recorder

500GB Hard-Disk with Improved Data Download Speed

Brigade's intuitive, affordable Mobile Digital Recorder captures real time footage from up to four vehicle mounted cameras. Optional GPS offers vital additional information such as vehicle location and speed.
Simple to install, data access is simple yet secure. The lockable hard drive is easily removed by authorised personnel for connection to a PC or laptop for data download and interrogation.

No. LTMSMDR/304A/500DV Size: W178 x H50 x D173mm
wgt. 3.54kg

- 12-24Vdc
- Suitable for use with camera monitor systems and cameras shown on pages 199-200. For further information please contact our sales team
- 2 Year warranty

Removable caddy and shock-proof mounting

Recording

- Records real time footage from up to four cameras
- Optional G-force sensor provides useful impact data in case of collision
- Optional GPS logs time, date, location and speed
  useful evidential information in case of claim or incident
- Recording triggers:
  - Four trigger inputs (such as doors opening, selecting indicator or reverse gear) can either activate recording or flag the trigger input on the recording
  - Motion detection with selectable sensitivity can activate recording – useful for surveillance when vehicle is unmanned or driver sleeping in the cab
- Internal camera can be added
- 4 Selectable levels of image quality
- Record at between 2 and 30 frames per second
- MPEG4 image compression allows high quality image resolution
- Hard disk records up to 780 hours of footage
- Record images prior to trigger activation and after vehicle is turned off to ensure events are captured in full
- Can record audio from auxiliary input

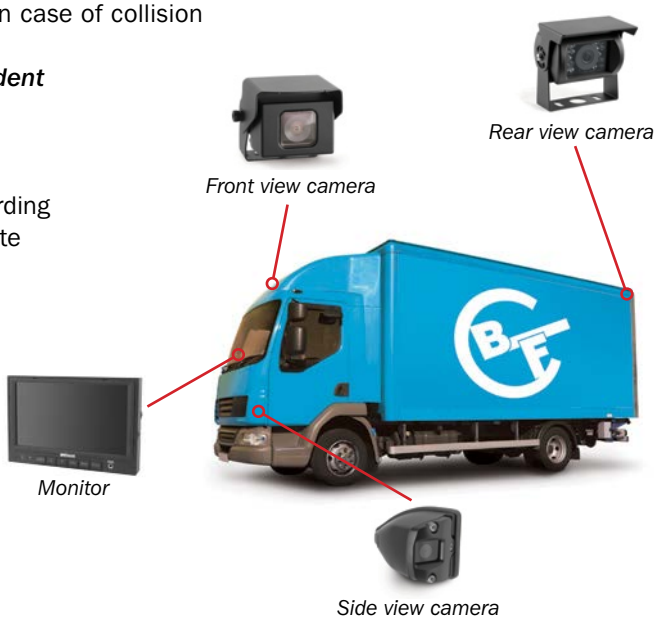

Data Download & Playback

- Data access is simple yet secure, meeting requirements of rules of evidence for legal use in court
- Easy play back:
  - In cab: If a monitor is present this can be useful for reviewing a recent incident or driver training
  - Externally: Having removed the caddy from the vehicle, footage can be viewed on a TV using video and audio inputs or on a PC using the USB2.0 connection
- No subscription fees for viewing software
- Simple to use HDD viewer software enables search of recorded video and export of critical moments to AVI video or static jpeg files
- Images, short video clips and information can be stored on an SDHC card, without removing the caddy from the vehicle

Actual footage as viewed using the viewer software. Rear, front, left and right side cameras

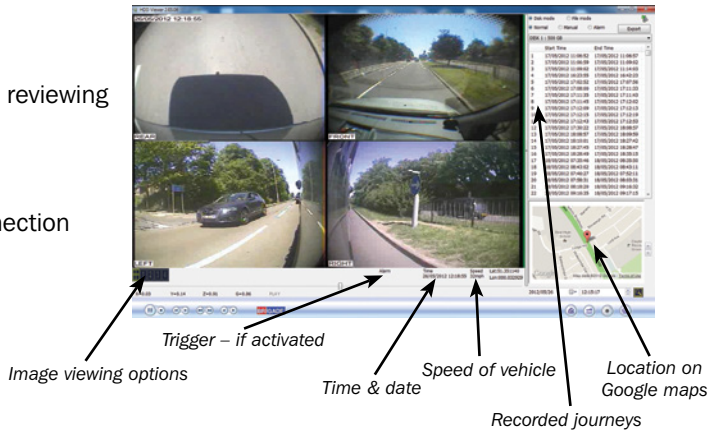

SAFETY – CONSPICUITY TAPE

Vehicle Conspicuity Tape
Reflexite® VC104+ Grade

Reflexite® by ORAFOL is the leading product brand within ECE104 approved marking tapes. The Reflexite® brand reflective tapes are known for being not only safe and visible from up to 1000 metres away, but also tough and durable as well as easy to apply. The Reflexite® VC104+ range includes a complete product line for application onto rigid bodies, onto circular tanker shapes, as well as onto curtain sided vehicles.

- Outstanding long distance night time visibility
- Easy to handle, cut and apply
- No edge sealing required
- No risk of cracking
- Resistant to power washing
- Highly resistant to most industrial cleaning processes
- Single layer prismatic construction with adhesive backing
- Approved to ECE104 class 'C'
- 10 Year warranty for rigid grade
- 3 Year warranty for curtain grade

From **July 2011** it is a mandatory requirement that conspicuity markings are fitted to goods vehicles with a gross vehicle weight exceeding 7.5t and trailers with a gross vehicle weight exceeding 3.5t.
Exact layout of the tape will depend on the design and intended use of the vehicle. Technical details are contained in European regulations on vehicle lights, paragraph 6.21 of UNECE Regulation 48.03.

Where should the conspicuity tapes be applied?

To the rear: here a full contour marking is required, i.e. a full 'box'.

To the sides: Here you can choose to do either a full contour ('box') marking, or a line marking of the length of the vehicle plus marking of the upper corners if the design of the vehicle allows for this. Minimum 80% of the length of the vehicle (excel. the length of the cabin) must be marked.

The lower line of the marking tape must be placed minimum 25 cm from the ground and in a height of maximum 150 cm. This can in special cases be extended to 250 cm.

The length of the upper corner markings must be minimum 25 cm. Upper corner markings should be applied as high as practical, but within 40 cm of the upper extremity of the vehicle. In cases where a top corner marking is not possible due to the construction of the vehicle, a line marking on its own is allowed. It is a good idea to mark also the tractor (e.g. on the door) to visually get a marking of the full length of the vehicle, however this is not an obligation.

The range includes solutions for all kinds of vehicles including applications onto rigid bodies, circular tanker shapes as well as curtain sides. Whatever the need, ORAFOL has a solution to keep you and others safe on the road.

Applications on different vehicle types:

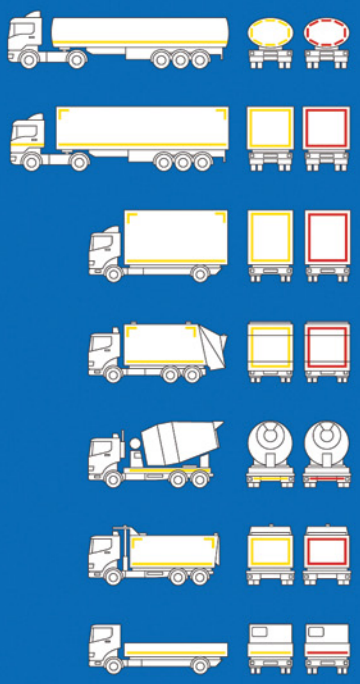

Welwyn Garden City tel +44 (0)1707 371161 fax +44 (0)1707 372603
Coseley tel +44 (0)121 520 0100 fax +44 (0)121 522 3889
website www.cbf.uk.com e-mail: sales@cbf.uk.com

SAFETY – CONSPICUITY TAPE

Reflexite® VC104+ Vehicle Conspicuity Tape

'Standard' Rigid Body Grade

Complete with #42 adhesive, for general application to rigid surfaces

No. VCT104+/12.5R wgt. 0.23kg/roll	50mm x 12.5mtr roll	Red
No. VCT104+/50R wgt. 0.92kg/roll	50mm x 50mtr roll	Red
No. VCT104+/12.5Y wgt. 0.23kg/roll	50mm x 12.5mtr roll	Yellow
No. VCT104+/50Y wgt. 0.92kg/roll	50mm x 50mtr roll	Yellow
No. VCT104+/12.5W wgt. 0.23kg/roll	50mm x 12.5mtr roll	White
No. VCT104+/50W wgt. 0.92kg/roll	50mm x 50mtr roll	White

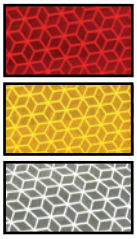

- 10 Year warranty
- Metalised polyester film with pressure sensitive adhesive backing
- IMPORTANT: Application instructions must be followed. (Available upon request)

Reflexite® VC104+ Vehicle Conspicuity Tape

'Superior' Rigid Body Grade

Complete with #36 adhesive, for superior adhesion to stainless steel surfaces

No. VCT104+/50R/36ADHESIVE wgt. 1.31kg/roll	50mm x 50mtr roll	Red
No. VCT104+/50Y/36ADHESIVE wgt. 1.31kg/roll	50mm x 50mtr roll	Yellow
No. VCT104+/50W/36ADHESIVE wgt. 1.31kg/roll	50mm x 50mtr roll	White

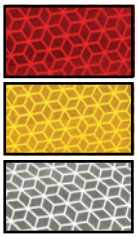

- 10 Year warranty
- Metalised polyester film with pressure sensitive adhesive backing
- IMPORTANT: Application instructions must be followed. (Available upon request)

Reflexite® VC104+ Vehicle Conspicuity Tape

'Standard' Curtain Grade

Unique solid vinyl construction, ideal application onto curtain sided vehicles

No. VCT104+PSA/50Y wgt. 1.00kg/roll	50mm x 50mtr roll	Yellow
No. VCT104+PSA/50W wgt. 1.00kg/roll	50mm x 50mtr roll	White

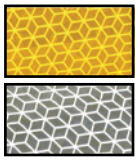

- 3 Year warranty (when applied to new curtains)
- Unique metalised vinyl construction with a pressure sensitive adhesive backing
- IMPORTANT: Application instructions must be followed. (Available upon request)

SAFETY – CONSPICUITY TAPE

Reflexite® VC104+ Vehicle Conspicuity Tape

Segmented Curtain Grade

Unique 'segmented' vinyl construction, ideal application onto curtain sided vehicles

No. VCT104+PSA/SEG50Y wgt. 1.24kg/roll	50mm x 50mtr roll	Yellow
No. VCT104+PSA/SEG50W wgt. 1.24kg/roll	50mm x 50mtr roll	White

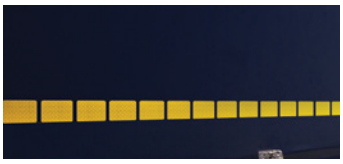

- 3 Year warranty (when applied to new curtains)
- No risk of cracking
- Unique metalised vinyl construction with a pressure sensitive adhesive backing
- IMPORTANT: Application instructions must be followed. (Available upon request)

Reflexite® VC104+ Vehicle Conspicuity Tape

Rigid Body Grade – Tanker Stickers

Complete with #36 adhesive for superior adhesion to stainless steel and general rigid surfaces. Ideal solution for circular applications

No. VCT104+/TANKER/50R wgt. 0.92kg/roll	50mm x 50mtr roll	Red
No. VCT104+/TANKER/50Y wgt. 0.92kg/roll	50mm x 50mtr roll	Yellow

- 310 x Kiss-cut stickers per 50 metre roll (160mm x 50mm)
- Metalised polyester film with pressure sensitive adhesive backing
- 10 Year warranty
- IMPORTANT: Application instructions must be followed. (Available upon request)

Reflexite® VC104+ Vehicle Conspicuity Tape

Customised Tape with your Company Logo

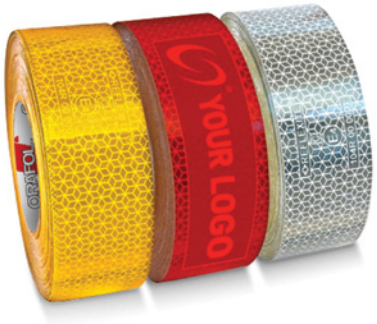

Available for both rigid and curtain grade applications.

- Logo regularly repeated along the roll
- Subject to minimum order quantity

Reflexite® Flexibright VC612

High Performance Livery Film

- Prismatic reflective performance
- Very high brightness
- Unique handling
- User friendly application
- Ability to conform to demands of vehicle shapes
- Flexible – great for application onto curved surfaces, e.g. motorbikes
- Easy to cut and no edge sealing required
- Withstands power washes
- Potential single piece removal
- Templates require fewer pieces
- Extensive warranty
- Full colour range available
- Meets PSDB specifications

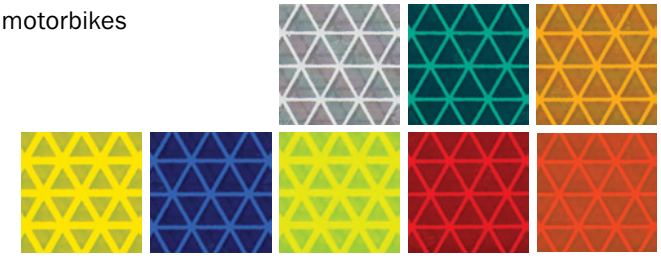

Welwyn Garden City tel +44 (0)1707 371161 fax +44 (0)1707 372603
Coseley tel +44 (0)121 520 0100 fax +44 (0)121 522 3889
website www.cbf.uk.com e-mail: sales@cbf.uk.com

SAFETY – FIRE EXTINGUISHERS

BLAZEKING

Fire Extinguishers
Dry Powder

Part No.	Capacity (kg)
FIREDCE1/POWDER	1
FIREDCE2/POWDER	2
FIREDCE3/POWDER	3
FIREDCE4/POWDER	4
FIREDCE6/POWDER	6
FIREDCE9/POWDER	9

Dry powder is an extremely versatile Class A, B & C fire-fighting medium for almost all fire risks.
In addition to dealing with electrical hazards, flammable liquids and gases, powder is also effective for vehicle fires.

- Durable steel operating handles
- Controllable squeeze-grip operation
- Corrosion resistant finish
- Multi-purpose application
- Clip-on durable plastic base on 3kg, 4kg, 6kg & 9kg models
- Factory filled
- Pressure gauge
- Complete with corresponding bracket
- CE approved
- Approved to BSEN 3
- ***Service record stickers available upon request***

Pressure Gauge

Service Record Sticker

Stainless steel strap (supplied with 2kg & 3kg unit)

See chart below for extinguisher sizes

Wood, Paper, Textiles, Fabric

Petrol, Diesel, Oils

Butane, Methane, Propane

Computers, Switchgear, Faxes

Storage Boxes, see page 215-216

No. FIRETB016F/UNI
Universal Transport Bracket. Suits 4, 6 & 9kg units

Model	FIREDCE1/ POWDER	FIREDCE2/ POWDER	FIREDCE3/ POWDER	FIREDCE4/ POWDER	FIREDCE6/ POWDER	FIREDCE9/ POWDER
Capacity (kg)	1	2	3	4	6	9
Discharge Time (sec)	8	13-14	13-14	15-17	19-20	24-25
Throw Range (M)	3.0	3.1	3.4	4.6	5.0	6.0
Fire Rating	8A 34B	13A 89B	21A 113B	27A 144B	43A 233B	55A 233B
Extinguisher Size (H x W) mm	320 x 85	385 x 110	440 x 215	490 x 200	540 x 254	560 x 330
Cylinder Diameter (D)	85	110	110	130	154	182
Working Temperature	-30°C to +60°C					
Filled Weight (kg)	2.0	3.7	5.2	6.4	13.3	17.5
Bracket Supplied	Vehicle Mounting Bracket			Wall Mounting Bracket		
Working Pressure (bar)	15	15	15	15	15	15

SAFETY – FIRE EXTINGUISHERS

BLAZEKING

Fire Extinguishers
Foam

Part No.	Capacity (litre)
FIREFCE1/FOAM	1
FIREFCE2/FOAM	2
FIREFCE6/FOAM	6
FIREFCE9/FOAM	9

Foam fire extinguishers provide a quick and powerful means of tackling class 'A' and 'B' type fires.
Foam is a highly effective fire-fighting medium specifically when used against petrol and volatile liquids.
By forming a flame-smothering seal over the surface and preventing re-ignition these units are ideal for multi-risk usage.

- Durable steel operating handles
- Controllable squeeze-grip operation
- Chrome finished brass spray nozzle
- Corrosion resistant finish
- Internal polythene lining
- Clip-on durable plastic base on 6 litre & 9 litre models
- Factory filled
- Pressure gauge
- Complete with corresponding bracket
- CE approved
- Approved to BSEN 3
- ***Service record stickers available upon request***

Service Record Sticker

See chart below for extinguisher sizes

Pressure Gauge

No. FIRETB016F/UNI
Universal Transport Bracket. Suits 6 & 9 litre units

A **Wood, Paper, Textiles, Fabric**

B **Petrol, Diesel, Oils**

Storage Boxes, see page 215-216

Model	FIREFCE1/FOAM	FIREFCE2/FOAM	FIREFCE6/FOAM	FIREFCE9/FOAM
Capacity (litre)	1	2	6	9
Discharge Time (sec)	8	12	17	17
Throw Range (M)	3.0	3.1	5.5	6.0
Fire Rating	5A 21B	8A 55B	21A 144B	27A 233B
Extinguisher Size (H x W) mm	335 x 85	405 x 110	540 x 277	620 x 297
Cylinder Diameter (D)	85	110	162	182
Working Temperature	+5°C to +60°C			
Filled Weight (kg)	2.1	3.8	9.6	13.9
Bracket Supplied	Vehicle Mounting Bracket		Wall Mounting Bracket	
Working Pressure (bar)	12	15	15	15

Welwyn Garden City tel +44 (0)1707 371161 fax +44 (0)1707 372603
Coseley tel +44 (0)121 520 0100 fax +44 (0)121 522 3889
website www.cbf.uk.com e-mail: sales@cbf.uk.com

SAFETY – FIRE EXTINGUISHERS

BLAZEKING

Fire Extinguishers
CO2

Part No.	Capacity (kg)
FIREC2S/CO2	2
FIREC5/CO2	5

Important for its non-damaging highly effective performance and cleanliness. Suitable for situations involving flammable liquids and electrical hazards. CO2 gas is harmless to delicate equipment and materials. Ideal for modern office environments, all electronic risks and where oils, spirits, solvents and waxes are in use.

- Durable steel operating handles
- Controllable squeeze grip operation
- High grade brass valve assembly to ensure reliability and optimise efficiency
- Aluminium alloy construction
- Harmless to machinery
- Corrosion resistant epoxy coated cylinder
- Factory filled
- Complete with corresponding bracket
- CE approved
- Approved to BSEN 3
- ***Service record stickers available upon request***

Service Record Sticker

FIREC2S/CO2

Petrol, Diesel, Oils

Computers, Switchgear, Faxes

No. FIRECB003F/2
2kg Transport Bracket
No. FIRECB004F/5
5kg Transport Bracket

FIREC5/CO2

Model	FIREC25/CO2	FIREC5/CO2
Capacity (kg)	2	5
Cylinder Diameter (mm)	105	160
Full Extinguisher weight (kg)	5.8	13.6
Discharge Time approx. (secs)	20	22
Fire Rating	34B	70B
Working Pressure (bar)	150	150
Throw Range (M)	6.5	7.0
Operational Temperature Range	-20°C to +60°C	

SAFETY – MARKER PLATES

UNECE Regulation 70.01 Marker Plates

104 Grade foil

From July 2011, vehicles exceeding 7.5t GVW, the fitment of Marker Plates became optional on vehicles fitted with conspicuity markings. When used in conjunction with conspicuity markings the Marker Plates must be approved to UNECE Regulation 70.01

- 104 Grade micro-prismatic 'Reflexite®' yellow foil
- 1mm aluminium plate (except self-adhesive)
- Manufactured to and carry ECE70.01 approval marks
- Single layer foil, alleviates almost any risk of delamination during pressure washing
- Self adhesive versions available where shown
- Maintains the aesthetics of the vehicle long after application

a) Full contour + Rear Marker Plates

b) Full contour + Rear Marker Plates contributing to contour

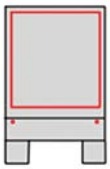

c) Full contour. No Rear Marker Plates

Rear Marker Plate
ECE70.01

No. RMPCBF/ECE7001/1 L1132 x W132mm
wgt. 0.58kg each Aluminium

- Supplied singly
- Carries ECE70.01 approval mark

Rear Marker Plate
ECE70.01

No. RMPCBF/ECE7001/2/3 L566 x W132mm
wgt. 0.58kg pair Aluminium
No. RMPCBFECE7001/2/3SA L566 x W132mm
wgt. 0.10kg pair Self adhesive

- Supplied in pairs
- Carries ECE70.01 approval mark

Rear Marker Plate
ECE70.01

No. RMPCBF/ECE7001/4 L1132 x W197mm
wgt. 0.80kg each Aluminium

- Supplied singly
- Carries ECE70.01 approval mark

Rear Marker Plates
ECE70.01

No. RMPCBF/ECE7001/5 L566 x W197mm
wgt. 0.80kg pair Aluminium

- Supplied in pairs
- Carries ECE70.01 approval mark

Rear Marker Plates
ECE70.01

No. RMPCBF/ECE7001/8 L283 x W132mm
wgt. 0.65kg set of 4 Aluminium

- Supplied in sets of 4
- Carries ECE70.01 approval mark

Rear Marker Plates
ECE70.01

No. RMPCBF/ECE7001/9 L283 x W197mm
wgt. 0.81kg set of 4 Aluminium

- Supplied in sets of 4
- Carries ECE70.01 approval mark

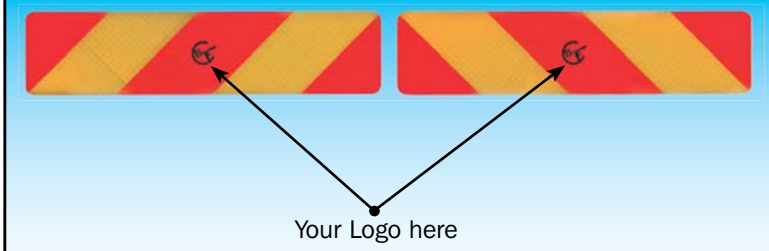

All marker plates can be monogrammed using customers own logo.

Subject to minimum order quantity

Welwyn Garden City tel +44 (0)1707 371161 fax +44 (0)1707 372603
Coseley tel +44 (0)121 520 0100 fax +44 (0)121 522 3889
website www.cbf.uk.com e-mail: sales@cbf.uk.com

SAFETY – PLATES & HOLDERS

ADR Hazchem Boards
Stainless steel

No. RMP3520200/VSS Vertical folding
wgt. 0.85kg W400 x H300 x 0.8mm Thick

No. RMP3520100/HSS Horizontal folding
wgt. 0.85kg W400 x H300 x 0.8mm Thick

- Fully stainless steel to prevent corrosion
- Extra toggle supplied (to hold board open)
- Sold singly

Vertical folding

Horizontal folding

ADR Hazchem Boards
Galvanized

No. RMP3320200/VGV Vertical folding
wgt. 1.05kg W400 x H300 x 1.00mm Thick

No. RMP3320100/HGV Horizontal folding
wgt. 1.05kg W400 x H300 x 1.00mm Thick

- Pre-galvanized to prevent corrosion
- Extra toggle supplied (to hold board open)
- Sold singly

Vertical folding

Horizontal folding

ADR Hazchem Plate & Holder
Galvanized & Stainless Steel

No. RMP3320000/PGV Plate 1mm Pre-galvanized steel
wgt. 0.93kg W400 x H300 x 1.00mm Thick

No. RMP3520000/PSS Plate 0.8mm Stainless steel
wgt. 0.75kg W400 x H300 x 0.8mm Thick

No. RMP3510382/PHCSS Holder 0.8mm Stainless steel
wgt. 0.86kg W405 x H305 x 0.8mm Thick

- Complete with plate retaining clips to meet ADR regulation chapter 5/5.3.2.2.2

Oversize Load Board
1mm Galvanized Steel

No. REF503627/GV W423 x H423 x 1.00mm Thick
wgt. 1.40kg

- Reflective class 1 foil
- Suitable for both left & right hand fitment
- TPESC Approval and DIN 11030

Directional Board
3mm Aluminium

No. REF600/BW/AL 600mm Dia.
wgt. 4.02kg 50mm routered hole

- Class REF2 engineering grade reflective vinyl
- Retroreflective blue sheeting to BS EN 12899-7

SAFETY – PLATES & HOLDERS

MOT Plate Holder
Heavy Duty

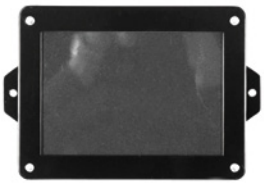

No. REF3003
wgt. 0.31kg
W190 x H145mm

- Accommodates VTG6 form
- Black epoxy coated steel

MOT Plate Holder
Heavy Duty

No. REF3278 Black epoxy coated steel
wgt. 0.45kg
W184 x H204mm

No. REF3278/ZP Zinc plated
wgt. 0.45kg
W184 x H204mm

- Accommodates old style VTG6A form: W148 x L180mm

MOT Plate Holder
Heavy Duty – Extended

No. REF3278/EX
wgt. 0.50kg
W184 x H234mm

- Accommodates new style VTG6A form W148 x L210mm
- Black epoxy coated steel

MOT Plate Holder
Light Duty

No. REF/MOT5
wgt. 0.50kg
W175 x H180mm

- Accommodates old style VTG6A & VTG6T form W148 x L180mm
- Black epoxy coated steel

MOT Plate & Licence Holder
Heavy Duty

No. REF3004
wgt. 0.37kg
W190 x H145mm

- Accommodates VTG6 form & licence disc
- Black epoxy coated steel

MOT Plate & Licence Holder
Heavy Duty

No. REF3277/EX
wgt. 0.57kg
W184 x H234mm

- Accommodates new style VTG6A form W148 x L210mm & licence disc

No. REF3277
wgt. 0.50kg
W184 x H204mm

- Accommodates old style VTG6A form W148 x L180mm & licence disc
- Black epoxy coated steel

Licence Disc Holder
Single, Double & Triple

No. REF874/S Single
wgt. 0.06kg

- Diameter: 77mm

No. REF874/D Double
wgt. 0.12kg

- Diameter: 77mm

No. REF874/T Triple
wgt. 0.16kg

- Diameter: 77mm
- Black epoxy coated steel

REF874/S

REF874/D

REF874/T

Welwyn Garden City tel +44 (0)1707 371161 fax +44 (0)1707 372603
Coseley tel +44 (0)121 520 0100 fax +44 (0)121 522 3889
website www.cbf.uk.com e-mail: sales@cbf.uk.com

SAFETY – PLATES & HOLDERS

Height Indicator
Imperial

No. REF/HM1 W155 x H125mm
wgt. 0.16kg each Red plastic

- Adjustable winding ranges from 8'0" – 20'11"

Height Indicator
Imperial

No. REF/HM2 W164 x H85mm
wgt. 0.23kg each Black epoxy coated steel

- Adjustable card system ranges from 10'0" – 19'11"
- Supplied with self adhesive velcro mounting pads

Number Plate Holder
Spring Loaded

No. REF60158/10
wgt. 0.04kg each

- Stainless steel
- Suits 110mm number plate
- Pre-drilled
- Sold singly
- 3 x ø5mm Fixing holes

Tail Lift Flag
Set of 2

No. REF245305/2/YEL
wgt. 0.05kg set of 2

- 2 Flags per set
- Yellow PVC with red reflective strip
- For use when tail lift is in operation
- Supplied complete with alloy plate & rivets

Fuel Filler Flap (Small)
Spring Loaded

No. MISC17267 W190 x H245mm
wgt. 0.61kg each

- Flap size: W164 x H190mm
- Zinc plated steel

Fuel Filler Flap (Large)
Spring Loaded

No. MISC17267/2 W255 x H295mm
wgt. 0.96kg each

- Flap size: W185 x H225mm
- Zinc plated steel

Tail Lift flags can be monogrammed using customers own logo.

Subject to minimum order quantity

SAFETY – REFLECTORS

Reflector
Side & Rear

ECE APPROVED

No. REF4 Side Amber
wgt. 0.03kg

No. REF4/R Rear Red
wgt. 0.03kg

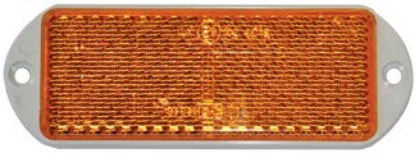

- Reflector: W88 x H34mm
- Overall: W107 x H38mm
- 2 x Ø4mm Fixing holes

Reflector
Rear

ECE APPROVED

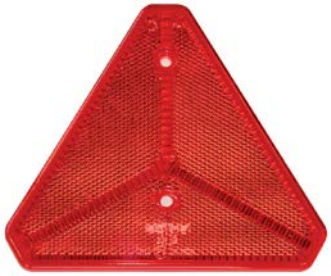

No. REF2/R Rear Red
wgt. 0.06kg

- Reflector: W150 x H132mm
- 2 x Ø5.6mm Fixing holes

Reflector
Side & Rear – Self-Adhesive

ECE APPROVED

No. REF4/SA Side Amber
wgt. 0.02kg

- Reflector: W88 x H35mm

No. REF4/RSA Rear Red
wgt. 0.02kg

- Reflector: W88 x H35mm
- Self-adhesive backing

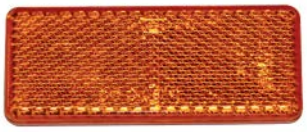

Reflector
Side

ECE APPROVED

No. REF60A Side Amber
wgt. 0.02kg

- Reflector: Ø60mm
- 1 x Ø5.6mm Fixing holes

Reflector
Front, Rear & Side

ECE APPROVED

No. REF6/C Front Clear
wgt. 0.02kg

No. REF6/R Rear Red
wgt. 0.02kg

No. REF6/A Side Amber
wgt. 0.02kg

- Reflector: W73 x H43mm
- 2 x Ø5.6mm Fixing holes

Welwyn Garden City tel +44 (0)1707 371161 fax +44 (0)1707 372603
Coseley tel +44 (0)121 520 0100 fax +44 (0)121 522 3889
website www.cbf.uk.com e-mail: sales@cbf.uk.com

SAFETY – STORAGE BOXES

Fire Extinguisher Holder
Top Loading / 2kg

No. FIREJFEX03R/R Red lid / Red body
wgt. 0.98kg
Size: H415 x W210 x D145mm

- Suitable for 2kg extinguisher
- Strong and durable
- Detachable lid for immediate access
- Suitable for wall mounting
- Numerous applications
- 4 x Ø9mm Fixing holes

Fire Extinguisher Box
Top Loading / 64 Series – 6kg

No. FIREJBFR64R/R Red lid / Red body
wgt. 3.00kg
Size: H640 x W250 x D250mm

- Suitable for 6kg extinguisher (max. height 590mm)
- Strong and durable
- Plastic toggle
- Double skinned lid with waterproof seal
- Internal tension strap to secure cylinder
- Textured surface finish
- Flat back for ease of mounting
- See page 217 for fixing kit

Fire Extinguisher Box
Top Loading / 65 Series – 6kg

No. FIREJBFR65R/R Red lid / Red body
wgt. 3.10kg
Size: H650 x W260 x D275mm

- Suitable for 6kg extinguisher (max. height 600mm)
- Strong and durable
- Plastic toggle
- Suitable for truck and trailer mounting
- Internal tension strap to secure cylinder
- Flat back for ease of mounting
- See page 217 for fixing kit

Fire Extinguisher Box
Top Loading / 65 Series – 6kg

No. FIREJBFB65B/B Black lid / Black body
wgt. 3.10kg
Size: H650 x W260 x D275mm

- Suitable for 6kg extinguisher (max. height 600mm)
- Strong and durable
- Plastic toggle
- Suitable for truck and trailer mounting
- Internal tension strap to secure cylinder
- Flat back for ease of mounting
- See page 217 for fixing kit

SAFETY – STORAGE BOXES

Fire Extinguisher Box
Top Loading / 75 Series – 9-12kg

No. FIREJBFR75R/R Red lid / Red body
wgt. 4.50kg
Size: H750 x W300 x D300mm

- Suitable for 9-12kg extinguisher (max. height 700mm)
- Strong and durable
- Plastic toggle
- Suitable for truck and trailer mounting
- Internal tension strap to secure cylinder
- Flat back for ease of mounting
- See page 217 for fixing kit

Fire Extinguisher Box
Front Loading / 70 Series – 6kg

No. FIREJBWE70R/B Red door / Black body
wgt. 4.40kg
Size: H700 x W300 x D253mm

- Suitable for 6kg extinguisher
- Strong and durable
- Velcro straps / plastic toggle
- Suitable for truck or wall mounting
- Rubber seal and polycarbonate windows
- Fire extinguisher label supplied loose
- See page 217 for fixing kit

Fire Extinguisher Box
Front Loading / 83 Series – 9-12kg

No. FIREJBX83R/B Red door / Black body
wgt. 6.10kg
Size: H830 x W310 x D263mm

- Suitable for 9-12kg extinguisher
- Strong and durable
- Plastic toggle / velcro straps
- Suitable for truck or wall mounting
- Rubber seal and polycarbonate windows
- Fire extinguisher label supplied loose
- See page 217 for fixing kit

Fire Extinguisher Box
Front Loading / 68 Series – 6kg

No. FIREJBTE68R/B Red door / Black body
wgt. 3.80kg
Size: H680 x W260 x D220mm

- Suitable for 6kg extinguisher (max. height 600mm)
- Strong and durable
- Plastic toggle
- Detachable lid
- Neoprene seal
- Internal tension strap to secure cylinder
- Fire extinguisher label supplied loose
- See page 217 for fixing kit

Welwyn Garden City tel +44 (0)1707 371161 fax +44 (0)1707 372603
Coseley tel +44 (0)121 520 0100 fax +44 (0)121 522 3889
website www.cbf.uk.com e-mail: sales@cbf.uk.com

SAFETY – STORAGE BOXES

Spill Kit Safety Box
65 & 75 Series

No. FIREJBFA65G/G Grey lid / Grey body
wgt. 3.10kg
Size: H650 x W260 x D275mm
No. FIREJBFA75G/G Grey lid / Grey body
wgt. 4.50kg
Size: H750 x W300 x D300mm

- Specification as standard 65 & 75 series, but without internal restraining strap
- Strong and durable
- Plastic toggle
- Suitable for truck and trailer mounting
- Flat back for ease of mounting
- Spill kit label supplied loose
- See below for fixing kit

Spill Kit Storage Box
66 Series

No. FIREJBEA66T Grey lid / Grey body
wgt. 5.30kg
Size: H650 x W300 x D410mm

- Strong and durable
- Designed specifically for storage of spillage kits
- Factory fitted anti-static device to discharge any static created when withdrawing the spill kit
- 60 Litre capacity
- Essential for ADR required vehicles
- Supplied with spill kit label
- ***Not suitable for heavy objects, i.e. fire extinguishers***

Kit 55
To suit 65 & 75 Series

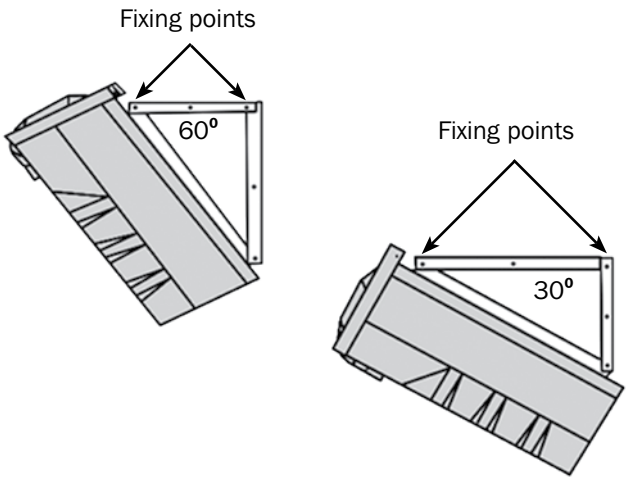

No. FIRE/KIT55
wgt. 3.10kg

- For mounting top loading fire boxes to a vehicle at an angle of 30° or 60°
- Kit includes: 2 x 500mm, 2 x 430mm & 2 x 265mm brackets, bolts, nuts & washers
- 30 x 3mm Steel angle, black painted

Kit 65
To suit 65, 70, 75 & 83 Series

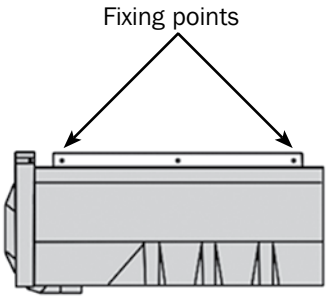

No. FIRE/KIT56
wgt. 1.60kg

- For mounting top & front loading fire boxes to a vehicle in horizontal & vertical positions
- Kit includes 500mm bracket, bolts, washers & nuts
- Important note:
  When fitting horizontally the box should be mounted so that it is at right angles to the direction of travel of the vehicle
- 30 x 3mm Steel angle, black painted

SAFETY

PSV
First Aid Kit

No. FA025 Case size: W255 x H205 x D60mm
wgt. 0.56kg
Contents
1 x HS2 First Aid Box
24 x Assorted Washproof Sterile Plasters
3 x No 2 Ambulance Dressing Large
2 x Premium No. 16 Eye Pad with Bandage
1 x Conforming Bandage
2 x Triangular Bandage Non Woven
10 x Antiseptic Wipes
1 x 5.0" Stainless Steel Plastic Handled Scissor
12 x Safety Pins Assorted
1 x Type 1 Universal Wall Hanging Bracket
1 x A4 First Aid Guidance Leaflet

Van & Truck
First Aid Kit

No. FA1019033 Case size: W190 x H185 x D80mm
wgt. 0.54kg Complete with securing bracket
Contents
6 x Alcohol Free Wipes
5 x Eye wash pads (20ml)
1 x Microporous Tape
12 x Safety Pins
20 x Washproof Plasters
2 x Conforming Bandages
2 x Triangular Bandages
5 x Non Adherent Dressings
1 x Large Dressing
1 x Scissors
2 x Fingerstalls
2 x Gloves (pairs)
1 x Guidance Leaflet

Single Person Travel Pack

No. FA1045026 Pack size: W130 x H130 x D60mm
wgt. 0.14kg
Contents
6 x Alcohol free wipes
2 x Gloves (pair)
1 x Guidance leaflet
1 x Large dressing
12 x Safety pins
2 x Triangular bandages
10 x Washproof plasters

Sterile Eye Wash
500ml

No. FA1047091 Size: H190 x Ø76mm
wgt. 0.56kg

- Contains sodium chloride (BP0.9% w/v)
- Tamperproof cap

Welwyn Garden City tel +44 (0)1707 371161 fax +44 (0)1707 372603
Coseley tel +44 (0)121 520 0100 fax +44 (0)121 522 3889
website www.cbf.uk.com e-mail: sales@cbf.uk.com

SAFETY

Oil Spill Kit

No. FIRESPILLKIT 30 Litre absorbant capacity
wgt. 3.10kg
Contents
4 x 1.2 Metre socks
25 x Absorbant pads
1 x Large cushion
2 x Bags & tie
1 x Gloves (pair)

Chemical Spill Kit

No. FIREJCRFWS 30 Litre absorbant capacity
wgt. 2.98kg
Contents
2 x 1.2 Metre socks
25 x Absorbant pads
2 x Small cushion
1 x Bag & tie
1 x Gloves (pair)

Emergency Hammer & Belt Cutter
Surface Mounting

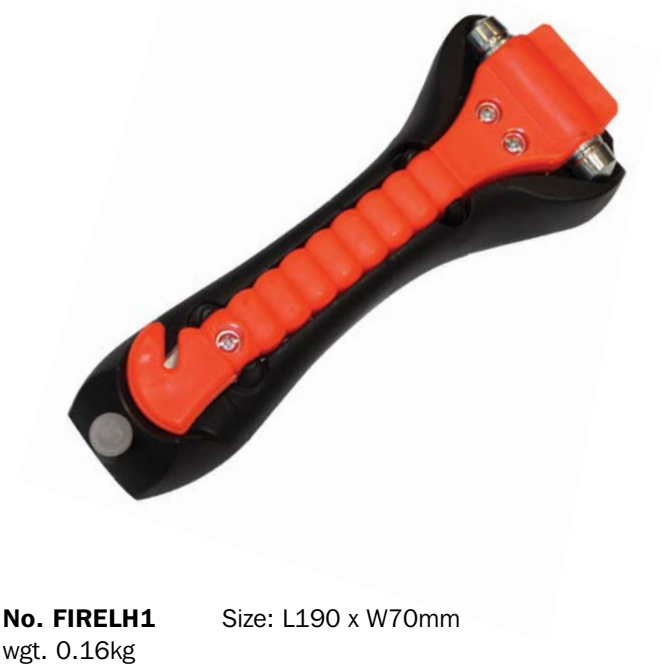

No. FIRELH1 Size: L190 x W70mm
wgt. 0.16kg

- Polypropylene hammer complete with hardened steel insert
- Steel belt blade
- Complete with snap-in holder

Warning Triangle
Reflective

No. REFMP120/WT
wgt. 0.78kg
Storage case: L430 x W155mm
Triangle: H450mm

- Ideal for breakdown situations
- Complete with storage case
- 'E' approved

SEALANTS & ADHESIVES

Fastcure 2000

Commercial Vehicle Adhesive Sealant

Manufactured exclusively for CBF by Sika Industries

High-quality multi-purpose non-sag one-component polyurethane sealant that cures on exposure to atmospheric moisture to form a durable elastomer. Tried and tested in service for many years.

No. SEALCBF2000/WHITE wgt. 0.44kg	White	300ml cartridge
No. SEALCBF2000/BLACK wgt. 0.44kg	Black	300ml cartridge
No. SEALCBF2000/GREY wgt. 0.44kg	Grey	300ml cartridge

- 12 cartridges per box
- One component formulation
- Elastic and non-corrosive
- Low odour
- Resistant to ageing and weathering
- Can be sanded and overpainted, 45-55mins. approx. tack free time 50% relative humidity
- Must be stored between 10°C and 25°C in dry conditions
- Product data sheet available upon request

Uses

Bonds to a wide range of substrates and is suitable for making permanent elastic seals of high adhesive strength

Suitable substrate materials include timber, metals, metal primers and paint coatings (two component systems), ceramic materials and plastic

Complete with nozzle

! Advice should be sought before using on transparent and pigmented materials that are prone to stress and cracking.

Sikaflex® 212FC

Commercial Vehicle Adhesive Sealant

High-quality multi-purpose non-sag one-component polyurethane sealant that cures on exposure to atmospheric moisture to form a durable elastomer.

No. SEAL212FC/W	White	300ml cartridge	wgt. 0.44kg
No. SEAL212FC/B	Black	300ml cartridge	wgt. 0.44kg
No. SEAL212FC/G	Grey	300ml cartridge	wgt. 0.44kg
	12 cartridges per box		
No. SEAL212FC/400W	White	400ml sachet	wgt. 0.49kg
No. SEAL212FC/400B	Black	400ml sachet	wgt. 0.49kg
	12 sachets per box		
No. SEAL212FC/600W	White	600ml sachet	wgt. 0.78kg
No. SEAL212FC/600B	Black	600ml sachet	wgt. 0.78kg
No. SEAL212FC/600G	Grey	600ml sachet	wgt. 0.78kg
	20 sachets per box		

Complete with nozzle

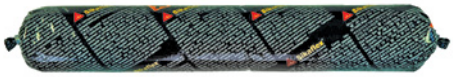

Areas of Application

Sikaflex®-212FC is a universal sealant which is suitable for most sealing applications in industrial commercial vehicle building. The product possesses excellent sealing properties and bonds well to most materials commonly used in the commercial vehicle industry, e.g. metals, plastics, wood and glass. Sikaflex®-212FC bonds to itself, can be sanded and overpainted in its fully cured state.

- One component formulation
- Tack free time: 40 minutes (approx.)
- Bonds well to a wide variety of substrates
- Can be sanded and overpainted
- Elastic
- Low odour
- Product data sheet available upon request
- Tried and tested in service for many years

Manufactured in accordance with ISO 9001/14001 Quality Assurance System & Responsible Care Programme

! Advice should be taken before using on transparent and pigmented materials that are prone to stress and cracking

Welwyn Garden City tel +44 (0)1707 371161 fax +44 (0)1707 372603
Coseley tel +44 (0)121 520 0100 fax +44 (0)121 522 3889
website www.cbf.uk.com e-mail: sales@cbf.uk.com

SEALANTS & ADHESIVES

Sikaflex® 221 Adhesive Sealant

Multi-Purpose Polyurethane Adhesive Sealant

No. SEAL221/W	White	300ml cartridge	wgt. 0.44kg
No. SEAL221/B	Black	300ml cartridge	wgt. 0.44kg
No. SEAL221/G	Grey	300ml cartridge	wgt. 0.44kg
No. SEAL221/BR	Brown	300ml cartridge	wgt. 0.44kg
	12 cartridges per box		
No. SEAL221/400W	White	400ml sachet	wgt. 0.49kg
No. SEAL221/400B	Black	400ml sachet	wgt. 0.49kg
No. SEAL221/400G	Grey	400ml sachet	wgt. 0.49kg
	12 sachets per box		
No. SEAL221/600W	White	600ml sachet	wgt. 0.78kg
No. SEAL221/600B	Black	600ml sachet	wgt. 0.78kg
No. SEAL221/600G	Grey	600ml sachet	wgt. 0.78kg
	20 sachets per box		

Complete with nozzle

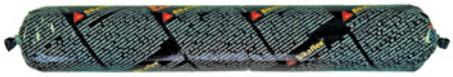

Areas of Application

Bonds to a wide variety of substrates, like timber, metals, metal primers and paint coatings (2-component systems), ceramic materials and plastics. Suitable for making permanent elastic seals of high adhesive strength.

- One component formulation
- Tack free time: 60 minutes (approx.)
- Resistant to ageing and weathering
- Can be sanded and overpainted
- Non-corrosive
- Elastic
- Low odour
- Bonds well to a variety of substrates
- NSF-approved for incidental food contact and potable water. ***Black and White only***
- Product data sheet available upon request

Manufactured in accordance with
ISO 9001/14001
Quality Assurance System
& Responsible Care Programme

! Advice should be taken before using on transparent and pigmented materials that are prone to stress and cracking

Sikaflex® 252 Adhesive Sealant

Structural Adhesive Sealant

No. SEAL252/W	White	300ml cartridge	wgt. 0.44kg
No. SEAL252/B	Black	300ml cartridge	wgt. 0.44kg
	12 cartridges per box		
No. SEAL252/400W	White	400ml sachet	wgt. 0.49kg
No. SEAL252/400B	Black	400ml sachet	wgt. 0.49kg
	12 sachets per box		
No. SEAL252/600W	White	600ml sachet	wgt. 0.78kg
No. SEAL252/600B	Black	600ml sachet	wgt. 0.78kg
	20 sachets per box		

Complete with nozzle

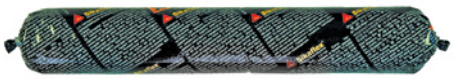

Areas of Application

Suitable for joints subjected to dynamic stresses.

Used on numerous substrates including timber, metals, particularly aluminium (including anodized components), sheet metal (including phosphated, chromated and zinc-plated components), metal primers and paint coatings (2-component systems), ceramic materials and plastics.

- One component formulation
- Tack free time: 40 minutes (approx.)
- Good gap filling properties
- Adhesion to a wide range of substrates
- Bonds and seals at the same time
- Short tack free and curing time
- Initial load bearing capacity
- Sandable and paintable
- Increases torsional stiffness of final assembly
- Shock/Impact resistant
- Excellent weather and water resistance
- Capable of withstanding high dynamic stresses
- USDA approved for incidental food contact
- Product data sheet available upon request

Manufactured in accordance with
ISO 9001/14001
Quality Assurance System
& Responsible Care Programme

! Advice should be taken before using on transparent and pigmented materials that are prone to stress and cracking

SEALANTS & ADHESIVES

Sikaflex® 552

High Performance Assembly Adhesive

Requires minimal surface preparation before use

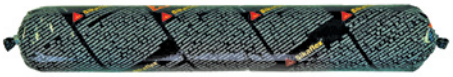

No. SEAL552/600W White 600ml sachet
wgt. 0.78kg
No. SEAL552/600B Black 600ml sachet
wgt. 0.78kg ***20 sachets per box***

Areas of Application

Sikaflex®-552 is suitable for structural joints that will be subjected to dynamic stresses.
Bonds well to a wide variety of substrates and is suitable for making permenant high strength elastic adhesive seals.
Suitable substrate materials include wood, metals, metal primers and paint coatings (2 component systems), ceramic materials, plastics and glass.

- One component 'hybrid' formulation
- Tack free time: 40 minutes (approx.)
- Bonds well to a wide variety of substrates
- Practically no need for priming
- Resistant to UV radiation
- Resistant to ageing and weathering
- Capable of withstanding high dynamic stresses
- Isocyanate, Solvent, PVC and VOC free
- Elastic
- Low odour
- Can be overpainted
- Product data sheet available upon request

Manufactured in accordance with
ISO 9001/14001
Quality Assurance System
& Responsible Care Programme

! Advice should be taken before using on transparent and pigmented materials that are prone to stress and cracking

Sikaflex® 265

Window Replacement Adhesive & Joint Sealant

for Buses, Trucks & Rail Vehicles

Complete with nozzle

No. SEAL265/B Black 300ml cartridge wgt. 0.44kg
12 cartridges per box
No. SEAL265/600B Black 600ml sachet wgt. 0.78kg
20 sachets per box

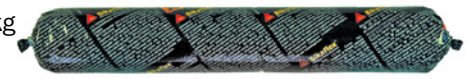

Areas of Application

Sikaflex®-265 is designed for direct glazing applications in both the OEM and repair markets, and is suitable for use with mineral glassbased windows. Before installing laminated safety glass windshields incorporating heating elements or radio aerials in the PVB sandwich layer, we recommend to contact Sika's Technical Service Department for advice.
Sikaflex®-265 can be tooled to a very fine finish. It contains special stabilizing ingredients to enhance its UV resistance, therefore it is suitable for use in exposed joints.

- One component formulation
- Tack free time: 45 minutes (approx.)
- Excellent working characteristics
- Fast cure time
- Resistant to ageing and weathering
- Solvent and PVC free
- Low odour
- Equally suitable for manual application and bulk dispensing
- Primerless application possible
- UV resistant
- Product data sheet available upon request

Manufactured in accordance with
ISO 9001/14001
Quality Assurance System
& Responsible Care Programme

! Advice should be taken before using on transparent and pigmented materials that are prone to stress and cracking

Welwyn Garden City tel +44 (0)1707 371161 fax +44 (0)1707 372603
Coseley tel +44 (0)121 520 0100 fax +44 (0)121 522 3889
website www.cbf.uk.com e-mail: sales@cbf.uk.com

SEALANTS & ADHESIVES

Sikaflex® 521 UV Adhesive Sealant
Isocyanate & Solvent Free

One component PUR-Hybrid sealant based on the Sika Silane Terminated Polymer (STP) technology. The product cures on exposure to the atmospheric humidity to form a durable elastomer.

No. SEAL521UV/B wgt. 0.44kg	Black	300ml cartridge
No. SEAL521UV/G wgt. 0.44kg	Grey	300ml cartridge
No. SEAL521UV/W wgt. 0.44kg	White	300ml cartridge
	12 cartridges per box	
No. SEAL521UV/600B wgt. 0.78kg	Black	600ml sachet
No. SEAL521UV/600W wgt. 0.78kg	White	600ml sachet
	20 sachets per box	

Complete with nozzle

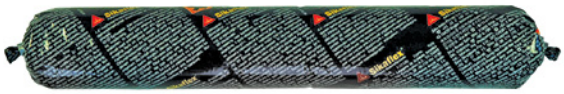

Areas of Application
Sikaflex®-521UV adheres well to a wide variety of substrates and is suitable for elastic sealing and bonding. Suitable substrate materials include timber, metals, metal primers and paint coatings (2 component systems), ceramic materials and plastics.

- Tack free time: 30 minutes (approx.)
- Ageing and weathering resistant
- Bonds well to a wide variety of substrates without the need for special pre-treatment
- Elastic
- Low odour
- Can be sanded and overpainted
- Non-corrosive
- High electrical resistance
- Isocyanate and solvent free
- Silicone and PVC free
- Product data sheet available upon request

Manufactured in accordance with
ISO 9001/14001
Quality Assurance System
& Responsible Care Programme

! Advice should be taken before using on transparent and pigmented materials that are prone to stress and cracking

Sikaflex® 228
Fluid Adhesive

A self levelling one component polyurethane adhesive of low viscosity that cures on exposure to atmospheric moisture to form a durable elastomer.

No. SEAL228/600GW wgt. 0.78kg	Greyish White	600ml sachet
	20 sachets per box	

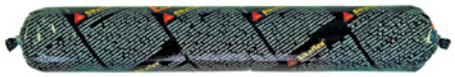

Areas of Application
An elastic panel adhesive suitable for bonding a variety of panel materials, including solvent-resistant foams (PUR), stainless steel sheet, aluminium sheet, timber-based building boards and plasterboards. It can also be used to seal seams and lap joints and to fill construction joints in floors. For exterior sealing applications, thin layers of Sikaflex®228 must be shielded from sunlight (e.g. by overpainting, the use of cover strips etc.)

- Tack free time: 60 minutes (approx.)
- One component formulation
- Self levelling / low viscosity
- Can be overpainted
- Elastic
- Low odour
- Does not contain highly inflammable solvents
- Product data sheet available upon request

Manufactured in accordance with
ISO 9001/14001
Quality Assurance System
& Responsible Care Programme

! Advice should be taken before using on transparent and pigmented materials that are prone to stress and cracking

SEALANTS & ADHESIVES

Sikaflex® 255FC
High Strength Elastic Adhesive

A fast-curing, flexible, high-performance, one-component, polyurethane based adhesive for bonding glass, panels and other structures to a variety of substrates. It begins to cure and exhibit excellent green strength as soon as the product is extruded or the cartridge is opened. It is not for use in the replacement of automotive windshields.

No. SEAL255FC/B Black 300ml cartridge
wgt. 0.44kg ***12 cartridges per box***

Complete with nozzle

400ml Sachets available to order (20 sachets per box)

Areas of Application
Sikaflex®255FC is suitable for use on glass as well as metal panels (primed and painted). It offers extremely high initial bond strength. Its fast rate of cure results in rapid strength development and shorter service times.
Bonding trim, moulding and all kinds of styling elements.
Structural bonding of large parts, including sheet metal, composites and glass. Used to replace rivets and other mechanical fasteners.

- Tack free time: 30 minutes (approx.)
- One component formulation
- Bonds and seals at the same time
- Short tack free and curing time
- Very high thixotropy for good gap filling properties
- Adhesion to a wide range of substrates
- Non-staining curing process
- Non-corrosive
- Initial load bearing capacity
- Increases torsional stiffness
- Vibration and sound damping properties
- Overpainting with many coatings (consult Sika)
- Shock/Impact resistant
- Product data sheet available upon request

Manufactured in accordance with
ISO 9001/14001
Quality Assurance System
& Responsible Care Programme

! Advice should be taken before using on transparent and pigmented materials that are prone to stress and cracking

SikaTack®-Drive
Automotive Glass Replacement

A cold applied windshield adhesion which is easy to apply. It exhibits excellent technical characteristics such as primerless application, compatibility with glass mounted aerials, non-conductivity, and offers quality combined with safety.

No. SEALSIKATACK/B Black 300ml cartridge
wgt. 0.44kg ***12 cartridges per box***

Complete with nozzle

400ml Sachets available to order (20 sachets per box)

Areas of Application
SikaTack®-Drive has been specially designed for the Automotive Glass Replacement business. With its excellent performance and application properties it is well suitable for mobile as well as in-house installations.

- Tack free time: 15 minutes (approx.)
- Primerless
- Solvent free
- Short cut-off string
- Very good non-sag properties
- Easy and clean application
- Sika® All-in-One modulus
- Suitable for cars with integral antennas
- Short safe drive-away time (according to FMVSS 212/208, no seat belts, twin airbags fitted)
- Prevents contact corrosion for aluminium bodied vehicles
- Product data sheet available upon request

Manufactured in accordance with
ISO 9001/14001
Quality Assurance System
& Responsible Care Programme

! Advice should be taken before using on transparent and pigmented materials that are prone to stress and cracking

Welwyn Garden City tel +44 (0)1707 371161 fax +44 (0)1707 372603
Coseley tel +44 (0)121 520 0100 fax +44 (0)121 522 3889
website www.cbf.uk.com e-mail: sales@cbf.uk.com

SEALANTS & ADHESIVES

SikaLastomer® 710
Butyl Sealant
A butyl paste sealant containing solvents

No. SEAL710/B Black 310ml cartridge
wgt. 0.44kg ***12 cartridges per box***

Complete with nozzle

Areas of Application
Especially suitable for plastic sealing with a possibility of future disassembly. It can be used in the car, bus, truck and caravan industry. SikaLastomer®-710 shows good adhesion on almost every technical surface with minimal surface pre-treatment.

- Skinning time: 10 - 30 minutes (approx.)
- One component, butyl sealant
- Cures without heat
- Easy to apply
- Good adhesion spectrum
- Good ageing resistance
- Plastic product
- Later disassembly possible
- Product data sheet available upon request

Manufactured in accordance with
ISO 9001/14001
Quality Assurance System
& Responsible Care Programme

! Advice should be taken before using on transparent and pigmented materials that are prone to stress and cracking

Sika Sanisil®
Silicone Sealant

A one-part acetoxy-cure silicone sealant that cures by reaction with atmospheric moisture to form a durable elastomer. It is suitable for sanitary and other applications where mildew resistance is required.

No. SEALSANISIL/C Clear/Transparent 300ml cartridge
wgt. 0.44kg
No. SEALSANISIL/W White 300ml cartridge
wgt. 0.44kg ***12 cartridges per box***

Complete with nozzle

Limitations
- Sika Sanisil® is not recommended for porous substrates such as concrete, stone, marble and granite.

Cure Mechanism
- Sika Sanisil® cures by reaction with atmospheric moisture. At low temperatures the water content of the air is lower and the curing reaction proceeds somewhat more slowly.

- Skinning time: 25 minutes (approx.)
- Solvent free
- 100% Silicone polymer
- High elasticity & flexibility
- Excellent resistance to ageing, shrinkage, cracking and discolouration
- Long term fungus and mildew resistance
- UV resistance
- Product data sheet available upon request

Manufactured in accordance with
ISO 9001/14001
Quality Assurance System
& Responsible Care Programme

! Advice should be taken before using on transparent and pigmented materials that are prone to stress and cracking

SEALANTS & ADHESIVES

Primers

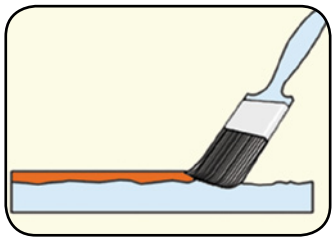

Manufactured in accordance with ISO 9001/14001 Quality Assurance System & Responsible Care Programme

Few surfaces are completely ideal for bonding. Priming is a means of transforming a surface, chemically, physically, or both, to give improved long and short term performance. The simplest form of priming is wiping the prepared surface with a conditioner which reacts with the surface to give improved 'wetting' characteristics and more reactive sites. Porous and rough surfaces require a primer with more 'body' in it which will re-profile the surface to give a dense, even bond line.

The primer also prevents carriers or resins present in the wet adhesive being absorbed into the substrate which can cause premature drying or bond line starvation. Primers must always be allowed to dry thoroughly before applying the Sikaflex. They must be re-applied if left too long.
Primed surfaces must be protected from contamination by dust, vapours, moisture, etc. until the bond is formed.

- Product data sheet available upon request

Sika® Primer 204N

A moisture-curing low viscosity primer for use on base metals prior to bonding or sealing with Sikaflex® products.

No. SEAL204N 250ml bottle
wgt. 0.34kg Colour: Yellow

Areas of Application
Used as a bonding agent to promote adhesion of Sikaflex® products on metals like steel, stainless steel, galvanized steel, aluminium and anodized aluminium.

- Application temperature: +15°c to +25°c
- Flash-off time: Above 15°c 10 minutes
  Below 15°c 30 minutes
  Maximum: 24 hours
- Coverage: 50-150ml per M² (approx.), dependant on substrate porosity

Tests with actual substrates and conditions have to be performed to ensure adhesion and material compatibility.

! It is not suitable as an anti-corrosion paint

Sika® Primer 206 G+P

A black moisture-curing liquid primer specifically formulated for the treatment of bond faces in direct glazing work prior to application of Sika® polyurethane direct glazing adhesives.

No. SEAL206/250GP 250ml bottle
wgt. 0.33kg Colour: Black

Areas of Application
Used to give improved adhesion on glass and ceramic-coated glass in adhesive bonding applications. It can also be used to touch up scratches and other minor paint damage. Other substrates are plastics and some metals.

- Application temperature: +15°c to +25°c
- Flash-off time: Above 15°c 10 minutes
  Below 15°c 30 minutes
  Maximum: 24 hours
- Coverage: 50-150ml per M² (approx.), dependant on substrate porosity

Welwyn Garden City tel +44 (0)1707 371161 fax +44 (0)1707 372603
Coseley tel +44 (0)121 520 0100 fax +44 (0)121 522 3889
website www.cbf.uk.com e-mail: sales@cbf.uk.com

SEALANTS & ADHESIVES

Sika® Primer 210T

A low viscosity primer to improve adhesion of Sikaflex® products on various substrates.

No. SEAL210T/250 250ml bottle
wgt. 0.31kg Colour: slightly yellow

No. SEAL210T/1000 1000ml bottle
wgt. 1.10kg Colour: slightly yellow

Areas of Application
A general purpose primer which improves adhesion to GRP, ABS, Plastics, Aluminium, Steel, Polyurethane, Various paints, lacquers and varnishes.

- Application temperature: +15°c to +25°c
- Flash-off time: Above 15°c 10 minutes
  Below 15°c 30 minutes
  Maximum: 24 hours
- Coverage: 50-150ml per M² (approx.), dependant on substrate porosity

Sika® Primer 215

A transparent, slightly yellow liquid of low viscosity that cures with atmospheric moisture. It is used to prime various plastics, timber and other porous materials prior to bonding with Sika® products.

No. SEAL215/250 250ml bottle
wgt. 0.31kg Colour: slightly yellow

No. SEAL215/1000 1000ml bottle
wgt. 1.10kg Colour: slightly yellow

Areas of Application
Suitable for application to the following substrates: plastics such as GRP, epoxy resins, PVC, ABS, various non-metallic substrates, plywood, timber and wooden fixtures.

- Application temperature: +5°c to +40°c
- Flash-off time: Above 15°c 30 minutes
  Below 15°c 60 minutes
  Maximum: 24 hours
- Coverage: 50-150ml per M² (approx.), dependant on substrate porosity

! Because plastics vary so much in their composition, preliminary trials are necessary. This product must not be used on plastics that are prone to stress cracking, such as acrylics or polycarbonates.

Sika® Aktivator (Cleaner) 205

Pre-Treatment for Non-Porous Substrates.

No. SEAL205/250 250ml bottle
wgt. 0.27kg Colour: clear

No. SEAL205/1000 1000ml bottle
wgt. 0.93kg Colour: clear

Areas of Application
Used to clean and activate the following non-porous substrates: metals, plastics, glazed ceramics, painted surfaces.

- Application temperature: +5°c to +40°c
- Alcohol based
- Drying time (subject to ambient temperatures): 10 mins - 2 hours max.
- Coverage: 30-60ml per M² (approx.)

! Sika® Cleaner 205 contains iso-propanol, which may dull the surface finish of some freshly applied paints. Preliminary trials should be carried out.
! Never apply to porous substrates.

SEALANTS & ADHESIVES

Sika® Aktivator

A cleansing and activating agent specifically formulated for the treatment of bond faces in direct glazing work prior to application of various Sika® polyurethane adhesives.

No. SEALACTIV/250 250ml bottle
wgt. 0.25kg Colour: slightly yellow

No. SEALACTIV/1000 1000ml bottle
wgt. 0.90kg Colour: slightly yellow

Areas of Application

Used to clean and give improved adhesion on glass, ceramic-coated glass, the cut face of old polyurethane adhesive beads, polyurethane-coated window glass and two component paint systems.

- Application temperature: +5°c to +35°c
- Drying time: Over 15°c 10 minutes
  Below 15°c 30 minutes
  Maximum: 2 hours
- Coverage: 30-60ml per M² (approx.)

! Sika® Activator contains solvent, which may dull the surface finish of some freshly applied paints. Preliminary trials should be carried out. ! Never apply to porous substrates

Sika® Remover 208

Used to remove traces of Sikaflex® products as well as pre-cleaning painted substrates.

No. SEAL208 1000ml bottle
wgt. 0.95kg Colour: clear

Areas of Application

Used to remove excess uncured Sikaflex® adhesive or sealant from application tools or from soiled surfaces. Can also be used for the pre-cleaning of strongly contaminated non-porous substrates. Can be used to clean painted surfaces prior to bonding. Use Sika® Remover 208 according to Sika Primer Chart.

- Application temperature: +5°c to +35°c
- Drying time: 30 mins. – 24 hours max.

! Sika® Remover 208 must not be used to clean soiled skin

Sika® Wipes

Textured wipes for removal of uncured Sikaflex® and heavy soiling from skin.

No. SEALSIKA/WIPE 100 per box

- Convenient way of cleaning up on site
- No rinsing required
- Helps protect skin

Nozzle

Cartridge / Sachet

SEAL2223001/SAC

SEAL2221501/CAR

No. SEAL2221501/CAR
wgt. 0.01kg

- Suits all Fastcure and Sika cartridges

No. SEAL2223001/SAC
wgt. 0.01kg

- Suits both hand and air operated sachet guns

Welwyn Garden City tel +44 (0)1707 371161 fax +44 (0)1707 372603
Coseley tel +44 (0)121 520 0100 fax +44 (0)121 522 3889
website www.cbf.uk.com e-mail: sales@cbf.uk.com

SEALANTS & ADHESIVES

Sealant Applicator
Easi-Flow HD – 400ml

No. SEAL14/400
wgt. 0.54kg

- Suits cartridges up to 400ml
- No drip pressure release valve
- 7:1 Trigger ratio
- Epoxy coated frame
- Hardened and coated hexagonal rod to reduce wear and extend work life

Sealant Applicator
'Power-Flow' Cartridge – 400ml

No. SEALPF/CART400
wgt. 0.79kg

- Suits cartridges up to 400ml
- Wear compensation device
- Cartridge cradle support frame
- Strong welded steel epoxy coated frame and zinc coated corrosion resistant sliding components
- 12:1 Trigger ratio (18:1 available for higher viscosity materials)
- Switchable anti-drip pressure relief device

Sealant Applicator
'Ultra-Flow' Combi – 300ml, 400ml & 600ml

No. SEALUF/COMBI400
wgt. 1.06kg
No. SEALUF/COMBI600
wgt. 1.14kg

- For use with cartridges and sachets
- Dispenses 300ml, 400ml & 600ml sachets*
- Dispenses 300ml & 400ml cartridges*
- Aluminium barrels as standard, transparent optional
- 25:1 Trigger ratio, producing 5kN thrust for use with high viscosity materials
- Full range of accessories available

depending on barrel length

Sachet Gun Applicator
Pneumatic Applicator

No. SEAL400/AIR
wgt. 0.94kg
No. SEAL600/AIR
wgt. 1.03kg

- Maximum use of sealant
- Quiet operation (less than 70dB)
- Quick adjustment pressure regulator
- Swivelling air hose connector
- Fast & accurate
- Spare nozzles available

SEALS – DRAUGHTPROOFING

Brush Strip Seals

Brush strip seals consist of 5 brush section sizes, ranging from 12mm to 180mm filament lengths. Each section is available with corresponding 45°, 90° and 180° angle carriers.

All sections can be cut to length using a fine tooth saw.
It is important that the galvanized steel channel which house the nylon filaments is then sealed to avoid filament loss. This can be accomplished by pinching the end of the channel with pliers. Alternatively, bolt cutters may be used which seal the ends automatically. All seals should be fitted with the door or window in the closed position. The seals should be fitted so that the brush filaments are in firm contact with the mating surface. Care should be taken not to overflex the trim against the mating surface.

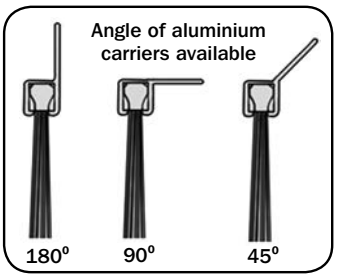

- Extruded filaments from Type 6 nylon
- Working temperature range -40°C to +100°C
- *Available in 2.0, 2.5 & 3.0 metre lengths*
- Good wearing & memory
- Mill finish extruded aluminium carrier

Brush Strip Seal
No. 1 Section

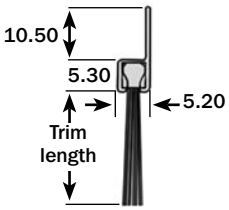

Part No.	Trim length (mm)	wgt. kg/metre
DGR1/12	12	0.17

Brush Strip Seal
No. 2 Section

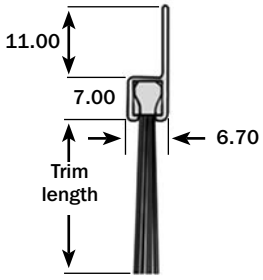

Part No.	Trim length (mm)	wgt. kg/metre
DGR2/15	15	0.24
DGR2/20	20	0.27
DGR2/26	26	0.29
DGR2/34	34	0.30

Brush Strip Seal
No. 3 Section

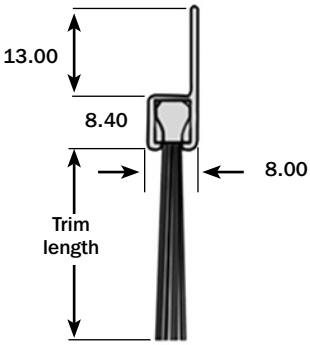

Part No.	Trim length (mm)	wgt. kg/metre
DGR3/17	17	0.38
DGR3/20	20	0.40
DGR3/26	26	0.41
DGR3/34	34	0.45
DGR3/40	40	0.46
DGR3/44	44	0.48
DGR3/50	50	0.50

Brush Strip Seal
No. 4 Section

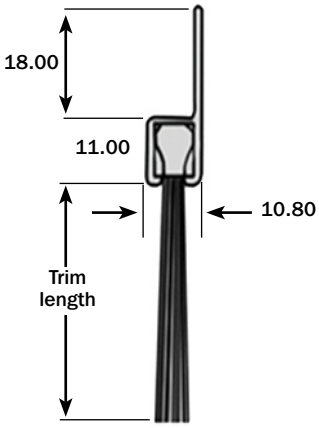

Part No.	Trim length (mm)	wgt. kg/metre
DGR4/26	26	0.67
DGR4/43	43	0.74
DGR4/50	50	0.81
DGR4/80	80	0.90
DGR4/102	102	1.06

Brush Strip Seal
No. 5 Section

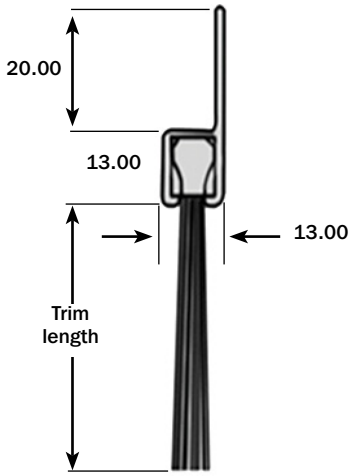

Part No.	Trim length (mm)	wgt. kg/metre
DGR5/46	46	1.08
DGR5/50	50	1.16
DGR5/66	66	1.30
DGR5/80	80	1.34
DGR5/102	102	1.41
DGR5/150	150	1.76
DGR5/180	180	1.91

Welwyn Garden City tel +44 (0)1707 371161 fax +44 (0)1707 372603
Coseley tel +44 (0)121 520 0100 fax +44 (0)121 522 3889
website www.cbf.uk.com e-mail: sales@cbf.uk.com

SEALS & TRIMS

Ejtrim Section

No. RUMS101/50B Black
No. RUMS101/50G Grey
wgt. 0.14kg/mtr
Roll: 50mtr
Panel thickness:
1-3mm nom.
No. of lips: 2

- Soft PVC c/w steel core

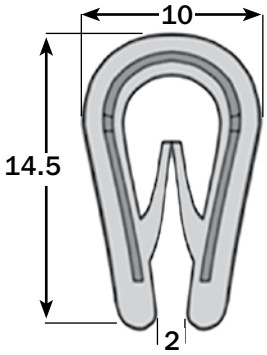

Ejtrim Section

No. RUMS102/50B Black
wgt. 0.06kg/mtr
Roll: 50mtr
Panel thickness:
1-2mm nom.
No. of lips: 2

- Soft PVC c/w steel core

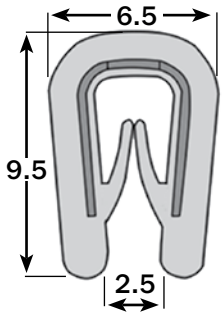

Ejtrim Section

No. RUMS103/50B Black
wgt. 0.16kg/mtr
Roll: 50mtr
Panel thickness:
1-4mm nom.
No. of lips: 2

- Soft PVC c/w steel core

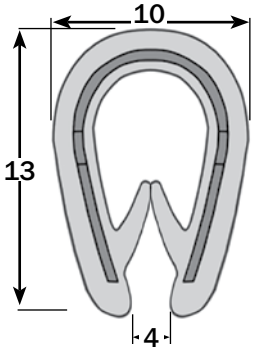

Ejtrim Section

No. RUMS106/50B Black
wgt. 0.18kg/mtr
Roll: 50mtr
Panel thickness:
1-5mm nom.
No. of lips: 1

- Soft PVC c/w steel core

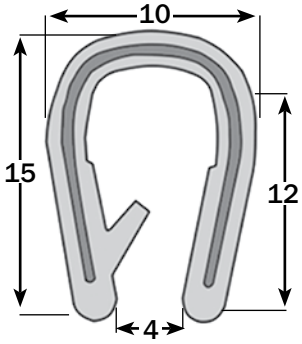

Top Seal

No. RUMS2193/TS Black
wgt. 0.15kg/mtr
Roll: 50mt
Panel thickness:
1-3mm nom.
No. of lips: 4

- Soft EPDM c/w steel core
- Seal: Sponge Rubber (EPDM)

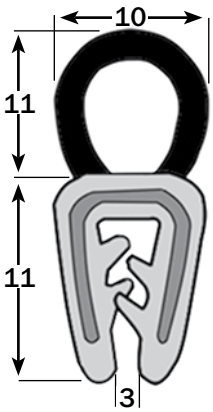

Ejseal Section

No. RUMS2370/EJ Black
wgt. 0.20kg/mtr
Roll: 50mtr
Panel thickness:
2-5mm nom.
No. of lips: 4

- Soft PVC c/w steel core
- Seal: Sponge Rubber (EPDM)

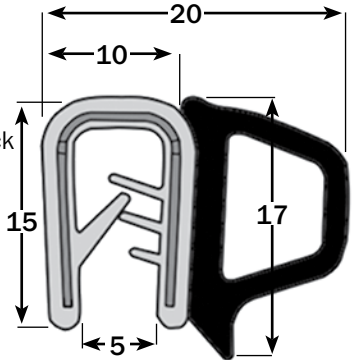

Ejseal Section

No. RUMS2208/EJ Black
wgt. 0.24kg/mtr
Roll: 50mtr
Panel thickness:
2-5mm nom.
No. of lips: 6

- Soft PVC c/w steel core
- Seal: Sponge Rubber (EPDM)

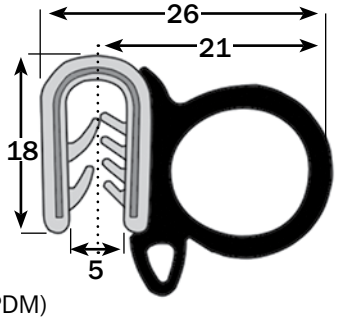

Ejseal Section

No. RUMS2369/EJ Black
wgt. 0.24kg/mtr
Roll: 50mtr
Panel thickness:
1-3mm nom.
No. of lips: 2

- Soft PVC c/w steel core
- Seal: Sponge Rubber (EPDM)

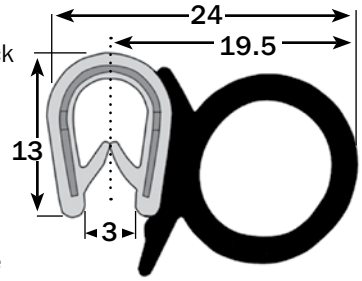

SEALS & TRIMS

Ejseal Section

No. RUMS2185/EJ Black
wgt. 0.24kg/mtr
Roll: 50mtr
Panel thickness:
1-3mm nom.
No. of lips: 4

- Soft EPDM c/w steel core
- Seal: Sponge Rubber (EPDM)

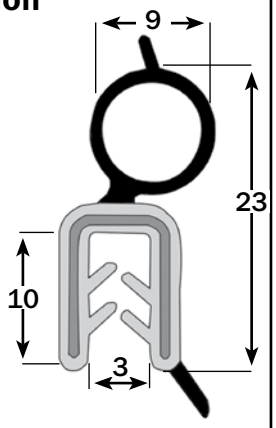

Ejseal Section

No. RUMS1723/EJ Black
wgt. 0.26kg/mtr
Roll: 50mtr
Panel thickness:
1-2mm nom.
No. of lips: 4

- Soft EPDM c/w steel core
- Seal: Sponge Rubber (EPDM)

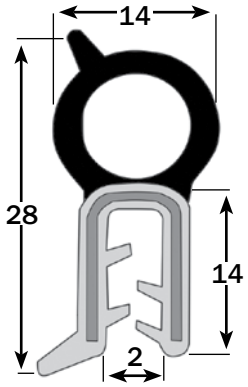

Leaf Seal

No. RUMS2009/LS Black
wgt. 0.24kg/mtr
Roll: 50mtr
Panel thickness:
2-4mm nom.
No. of lips: 2

- Soft EPDM c/w steel core
- Seal: Sponge Rubber (EPDM)

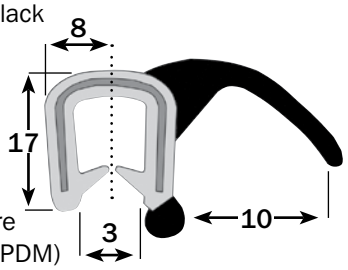

Ejseal Section

No. RUMS1959/EJ Black
wgt. 0.20kg/mtr
Roll: 50mtr
Panel thickness:
1-3mm nom.
No. of lips: 2

- Soft PVC c/w steel core
- Seal: Sponge Rubber (EPDM)

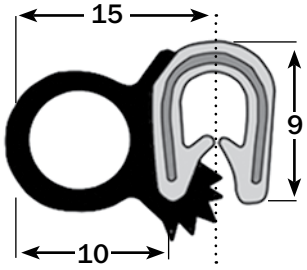

Leaf Seal

No. RUMS2006/LS Black
wgt. 0.28kg/mtr
Roll: 50mtr
Panel thickness:
1-3mm nom.
No. of lips: 4

- Soft EPDM c/w steel core
- Seal: EPDM Rubber

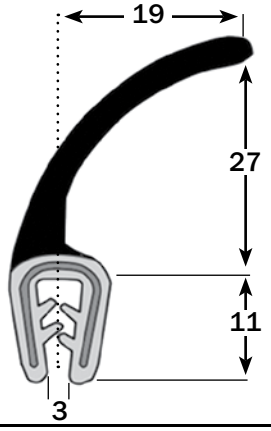

Leaf Seal

No. RUMS0763/LS Black
wgt. 0.30kg/mtr
Roll: 50mtr
Panel thickness:
1-3mm nom.
No. of lips: 5

- Soft EPDM c/w steel core
- Seal: Sponge Rubber (EPDM)

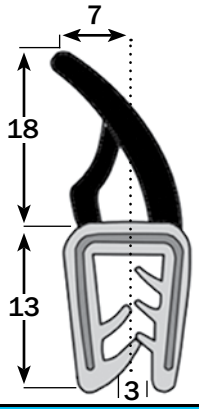

Top Seal

No. RUMS0112/TS Black
wgt. 0.08kg/mtr
Roll: 50mtr

- Hard EPDM c/w self-adhesive tape
- Seal: Sponge Rubber (EPDM)

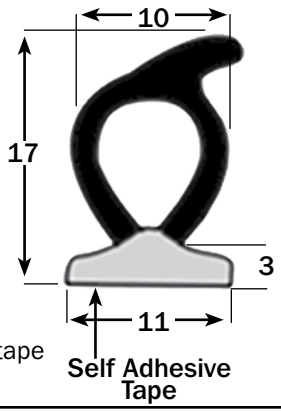

A full range of door seals can be found on

P52-54

Welwyn Garden City tel +44 (0)1707 371161 fax +44 (0)1707 372603
Coseley tel +44 (0)121 520 0100 fax +44 (0)121 522 3889
website www.cbf.uk.com e-mail: sales@cbf.uk.com

SHUTTER SPARES

Shutter Spares
Suitable for 'Mobile Doors' Shutter Ranges:
Access Plus Superslat,
Access Plus Fingershield,
Insulated Fingershield Shutters

End Hinge Complete
Dry Freight

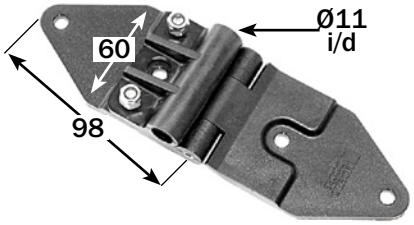

No. HEND061000301
Black plastic

Nylon Centre Hinge
Dry Freight

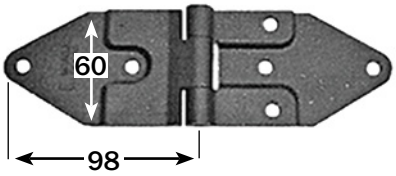

No. HEND061000302
Black plastic

Bottom Fixture Complete
Dry Freight

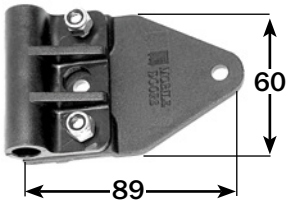

No. HEND061000901
Black plastic

Roller Holder
Dry Freight

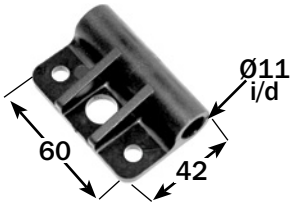

No. HEND061000501
Black plastic

Bottom Seal Co-Extrusion
Dry Freight

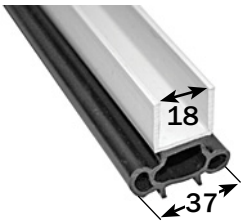

No. HEND061005201 2500mm
White rigid & black flexible plastic

Lift Handle, Zinc Plated
Dry Freight

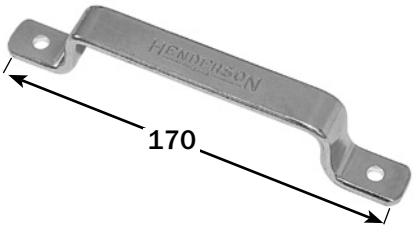

No. HEND011004204
Zinc plated steel

Plastic Roller Holder
Dry Freight

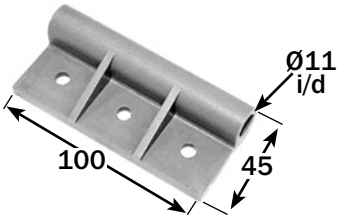

No. HEND021002601
Grey plastic

Nylon Roller
Dry Freight

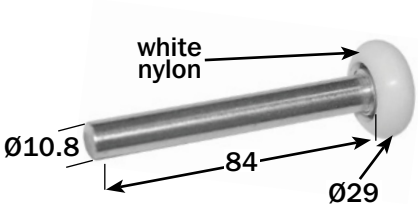

No. HEND011006605 29mm Roller
Stainless steel shaft

Nylon Roller
Dry Freight

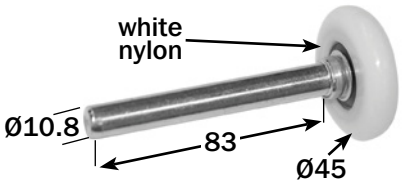

No. HEND011006603 45mm Roller
Zinc plated steel

Door Cable
All Shutters

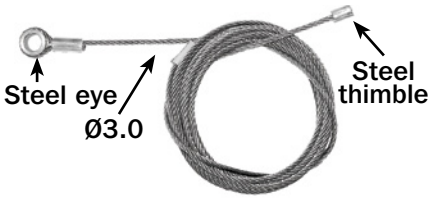

No. HEND011001104 2795mm
No. HEND011001106 3048mm

Side Seal
Dry Freight/K32 Insulated

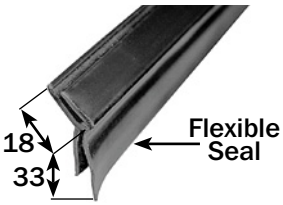

No. HEND021002005 2500mm
Black rigid & black flexible plastic

Head Seal Co-Extrusion/ Retainer
All Shutters

No. HEND061008401 2500mm
Grey rigid & black flexible plastic

Whiting shutter spares on the following page

SHUTTER SPARES

Shutter Spares
Suitable for Whiting Shutter Ranges:
Dry Freight,
Insulated

Door Panel
Tongue & Groove

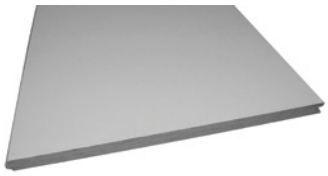

No. WHITDOOR/PANEL
2440 x 400mm

Centre Hinge
Dry Freight

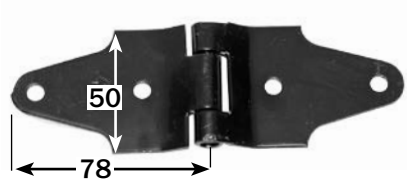

No. WHIT15
Black painted steel

End Hinge
Dry Freight

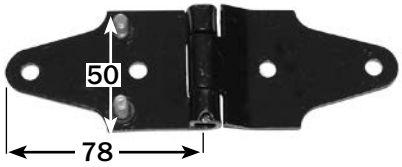

No. WHIT1207
Black painted steel
● For use with **WHIT1208**

Roller Holder
Dry Freight

No. WHIT1208
Black painted steel

Bottom Roller Cover
Dry Freight

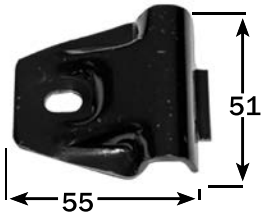

No. WHIT1021
Black painted steel

Grab Handle
All Shutters

No. WHIT3011715
Black painted steel

Top Seal
Dry Freight

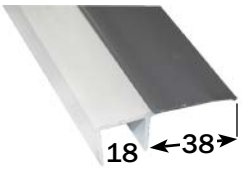

No. WHIT26 2440mm
White rigid & grey flexible plastic

Side Seal
Dry Freight

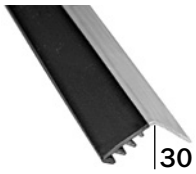

No. WHIT16 2440mm
Black rigid & grey flexible plastic

Pull Down Strap
All Shutters

No. WHIT30123
L400mm x 43mm

Door Cable
All Shutters

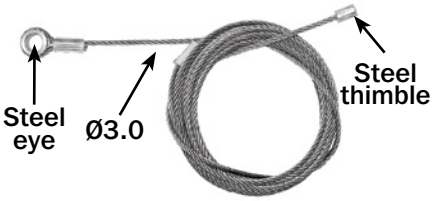

No. WHIT1/1 3175mm
3mm cable, steel wire

Nylon Roller
Dry Freight

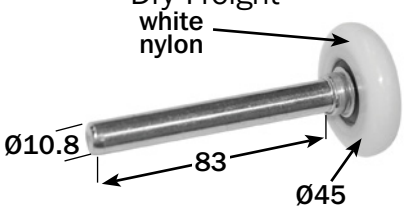

No. HEND011006603 45mm Roller
Zinc plated steel

Bottom Seal
Dry Freight

No. WHIT1676 2440mm
Grey plastic

cool guard™ BULKHEAD SYSTEMS

See pages 30-32 for information regarding the Cool-Guard range of insulated bulkheads

Welwyn Garden City tel +44 (0)1707 371161 fax +44 (0)1707 372603
Coseley tel +44 (0)121 520 0100 fax +44 (0)121 522 3889
website www.cbf.uk.com e-mail: sales@cbf.uk.com

SIDEGUARD SYSTEMS

ASGK990 SERIES

Lateral Protection System
ASGK990 Series
UNECE Regulation 73 Compliant

The fitment of Lateral Protection (Sideguard) Systems is a mandatory requirement on all new vehicles (where permissible), over 3500kg. The **ASGK990** Series is extremely robust, with its durable hot dipped galvanized legs (500 Hours salt spray tested) and anodized aluminium rail.

The **ASGK990** Series offers a pracitical and affordable solution to the body building and repair industry.

- Tested and approved by The V.C.A.
- All **ASGK990** components can be bought individually, making the ordering process simple
- Available with three different length legs
- Fixed and hinged systems available
- Meets all the mandatory requirements of 'Whole Vehicle Type Approval' (UNECE Regulation 73)
- Legs and rail are clearly marked with the 'E' approval marking (E11 73R-011005)
- Single and double pedestrian guard kits to suit, available from stock
- All hinged legs are 500 Hours salt spray tested
- 'E' Approval certificate and full mounting instructions available upon request

E11 73R-011005

APPROVED COMPONENT

SIDEGUARD SYSTEMS

Lateral Protection System
ASGK990 Series
Hinged Sideguard Legs

ASGK990 SERIES

Hinged sideguard legs are most commonly used in lateral protection systems, the pin can simply be removed allowing the leg to pivot on the fixed bolt. The system can then be lifted clear from the underside of the vehicle, the pin is then re-inserted to hold at the desired angle/height.

No. ASGK990/560AGV/73R 560/595mm Overall length
wgt. 3.25kg

No. ASGK990/700AGV/73R 700/735mm Overall length
wgt. 3.95kg

No. ASGK990/760AGV/73R 760/795mm Overall length
wgt. 4.05kg

- Robust hot dip galvanized finish
- Complete with pin & wire assembly
- 500 Hours salt spray tested
- Sold individually
- Supplied pre-assembled
- High tensile bolts required for mounting
  for full information refer to mounting requirements – P237

No. ASGK990/700FBGV/73R 700/735mm Overall length
wgt. 3.95kg

- As standard range, but fully bolted (2 tightened bolts, no pin & wire assembly)

E11 Approved

Fully bolted version

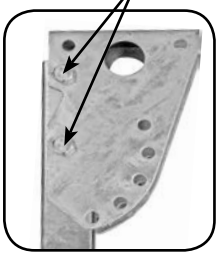

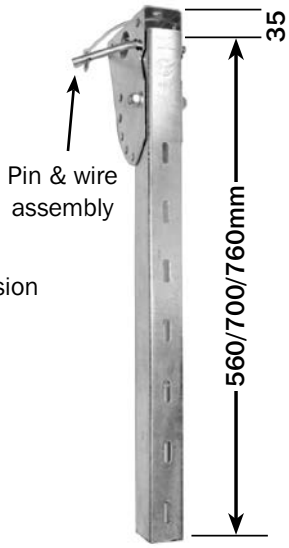

Lateral Protection System
ASGK990 Series
Chassis Mounted Sideguard Support Beam

ASGK990 SERIES

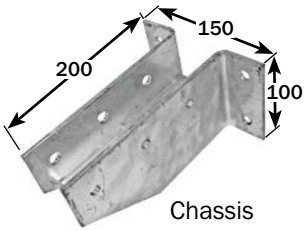

Chassis Bracket

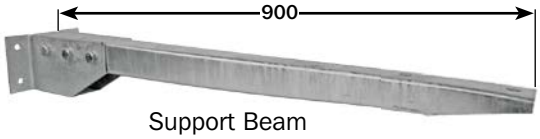

Support Beam

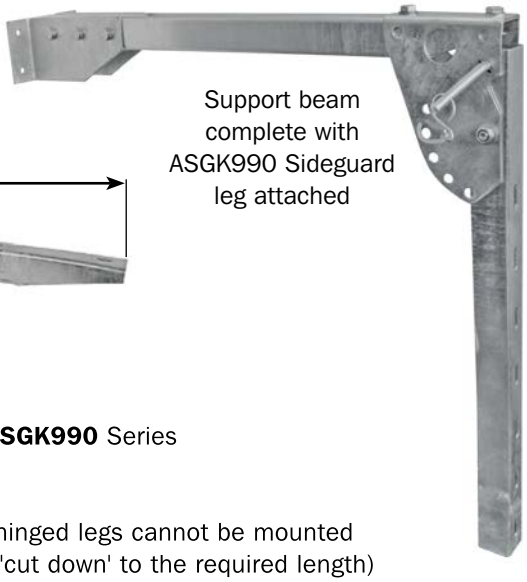
Support beam complete with ASGK990 Sideguard leg attached

No. ASGK990/900SAGV/73R
wgt. 5.16kg

- UNECE Regulation 73 compliant when used in conjunction with **ASGK990** Series hinged legs and sideguard rail
  Full documents available upon request
- Ideally suited for fridge vehicles, tippers and where conventional hinged legs cannot be mounted
- Designed to suit standard chassis widths, (Support beam can be 'cut down' to the required length)
- Robust design
- Fully galvanized
- Excellent corrosion resistance – 500 Hours salt spray tested
- Full fitting instructions available upon request
- Each kit consists of: 1 x Chassis Bracket W150 x D100 x L200mm
  1 x Support Beam W53 x D50 x L900mm

E11 Approved

Welwyn Garden City tel +44 (0)1707 371161 fax +44 (0)1707 372603
Coseley tel +44 (0)121 520 0100 fax +44 (0)121 522 3889
website www.cbf.uk.com e-mail: sales@cbf.uk.com

SIDEGUARD SYSTEMS

ASGK990 SERIES

Lateral Protection System
ASGK990 Series
Anodised Aluminium Rail

No. ASGK990/3000AR/73R 3000mm
wgt. 3.60kg
No. ASGK990/3200AR/73R 3200mm
wgt. 3.84kg
No. ASGK990/3400AR/73R 3400mm
wgt. 4.08kg
No. ASGK990/4000AR/73R 4000mm
wgt. 4.80kg
No. ASGK990/5000AR/73R 5000mm
wgt. 6.00kg
No. ASGK990/6000AR/73R 6000mm
wgt. 7.20kg

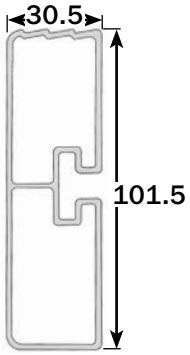

- W101.5 x D30.5 x 1.5mm Anodised Aluminium
- Single Bolt Fixing

E11 73R-011005

ASGK990 SERIES

Lateral Protection System
ASGK990 Series
Pedestrian End Rail Kits

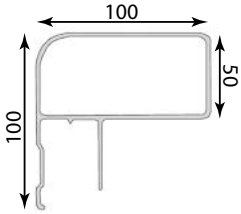

Single

No. ASGK100/2/SPGK wgt. 0.55kg
2 x 100mm Anodised Aluminium Pedestrian Guards
2 x ASGK10030/EC Rail End Caps
2 x ASGK1188/TPGC Top Pedestrian Guard Cover
2 x ASGK1189/BPGC Bottom Pedestrian Guard Cover
4 x M8 x 24mm Rail Mounting Bolts, Nyloc Nuts & Washers
4 x 4.8mm x 12mm Guard Attachment Rivets

Double

No. ASGK500/2/DPGK wgt. 2.11kg
2 x 500mm Anodised Aluminium Pedestrian Guards
4 x ASGK10030/EC Rail End Caps
2 x ASGK1188/TPGC Top Pedestrian Guard Cover Plates
2 x ASGK1189/BPGC Bottom Pedestrian Guard Cover Plates
8 x M8 x 24mm Rail Mounting Bolts, Nyloc Nuts & Washers
8 x 4.8mm x 12mm Guard Attachment Rivets

Spares

No. ASGK10030/EC	Rail end cap
No. ASGK1188/TPGC	Top pedestrian guard cover
No. ASGK1189/BPGC	Bottom pedestrian guard cover

ASGK10030/EC

ASGK1188/TPGC
ASGK1189/BPGC

ASGK990 Mounting Requirements

Class N2 – 3.5T to 12T DGVW
Class N3 – over 12T DGVW

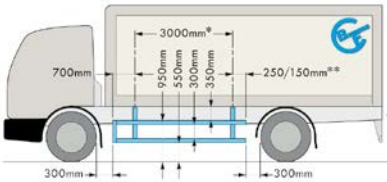

Class 03 – 3.5T to 10T TAW
Class 04 – over 10T TAW

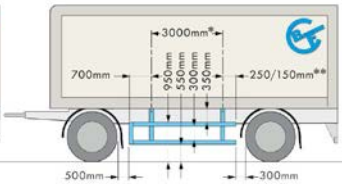

All vehicle classes

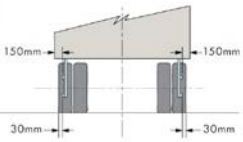

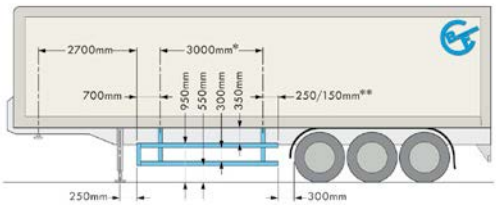

* A minimum of 3 legs will be required if the overall length of rail exceeds 3950mm (3850mm where the overall leg length exceeds 735mm)

** Please note: when overall leg exceeds 735mm, the rear-most over-hang MUST be reduced from 250 to 150mm

DGVW = Design Gross Vehicle Weight
TAW = Total Axle Weight

- *This information is for guideline purposes only. Please refer to UNECE Regulation 73 for up-to-date amendments & specifications*

SIDEGUARD SYSTEMS

Takler

Hinged Sideguard Legs
ASGK991 Series
Bright Zinc Plated

ASGK991 SERIES

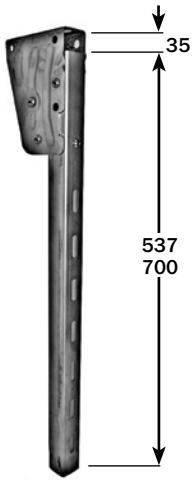

No. ASGK991/572ZP 537/572mm Overall length
wgt. 2.19kg

No. ASGK991/735ZP 700/735mm Overall length
wgt. 2.95kg

- Bright zinc plated finish
- Plastic 'clip' retaining mechanism
- Sold singly
- Pre-assembled / Labour saving

Locking Mechanism

IMPORTANT NOTE
Zinc plating is only classed as a 'sacrificial' coating (gives itself up to the corrosive media)
A protective barrier (i.e. paint) is recommended to protect against moisture
CBF cannot be held responsible for the effects of corrosion on zinc plated parts

Takler

Hinged Sideguard Legs
ASGK991 Series
Black Powder Coated

ASGK991 SERIES

No. ASGK991/430BLK 395/430mm Overall length
wgt. 2.00kg

No. ASGK991/572BLK 537/572mm Overall length
wgt. 2.19kg

No. ASGK991/735BLK 700/735mm Overall length
wgt. 2.95kg

- Robust powder coated
- Plastic 'clip' retaining mechanism
- Sold singly
- Pre-assembled / Labour saving

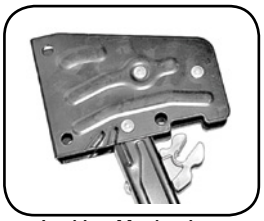
Locking Mechanism

Takler

Hinged Sideguard Legs
ASGK991 Series
Stainless Steel

ASGK991 SERIES

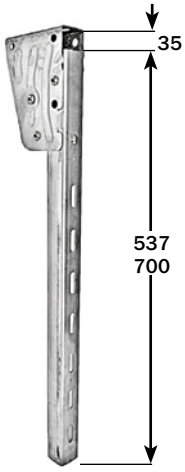

No. ASGK991/572SS 537/572mm Overall length
wgt. 1.50kg

No. ASGK991/735SS 700/735mm Overall length
wgt. 1.70kg

- Corrosion resistant stainless steel
- Plastic 'clip' retaining mechanism
- Sold singly
- Pre-assembled / Labour saving

Locking Mechanism

Welwyn Garden City tel +44 (0)1707 371161 fax +44 (0)1707 372603
Coseley tel +44 (0)121 520 0100 fax +44 (0)121 522 3889
website www.cbf.uk.com e-mail: sales@cbf.uk.com

SLIDING DOOR HARDWARE

Sliding Door Gear

Suitable for doors weighing up to 36kg. Sold as complete sets – simply measure the door width and see below for part number identification

All door gears are supplied with:
Top Assembly and cover strip (not shown)
2 x **DGR1203** Spring-loaded Wheel Guides
1 x Bottom Track

Spare parts:

No. DGR1203 Spring-loaded wheel guide

No. DGR1212 Bottom Track (length required)

Part No.	Door Width (mm)	Bottom Track - Length (mm)	Top Assembly Cover Strip	DGR1203 Wheel Guides	wgt. (kg) per set
DGR80058	610	1220	✔	2	2.35
DGR80026	686	1380	✔	2	2.49
DGR80027	762	1520	✔	2	2.64
DGR80028	838	1670	✔	2	2.78
DGR80029	914	1820	✔	2	2.92
DGR80030	990	1980	✔	2	3.06
DGR80031	1067	2130	✔	2	3.19

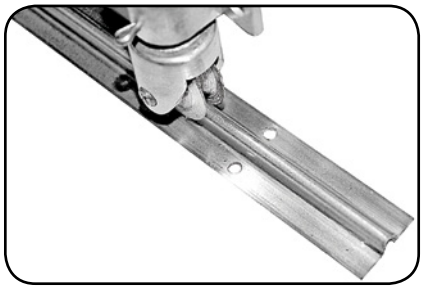

Tubular Track & Door Hangers

No. DGR200/10 Tubular Track
wgt. 5.10kg L3000 x H41 x W38mm

No. DGR227 Sliding 4-wheel hanger to suit
wgt. 0.32kg

● Suits doors up to 115kg

DGR227

Curtain Track & Steel Wheels

No. DGR35/3000 Curtain Track 3 metre
wgt. 5.10kg Galvanized steel
Size H44 x W35 x 2.3mm

No. DGR35/4000 Curtain Track 4 metre
wgt. 6.80kg Galvanized steel
Size H44 x W35 x 2.3mm

No. DGR682 Steel wheels to suit
wgt. 0.23kg

DGR682

SLIDING DOOR HARDWARE

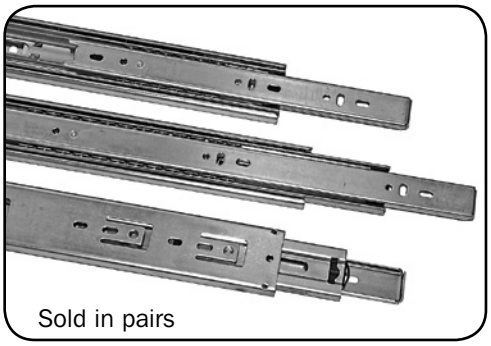

Telescopic Slides
Zinc Plated

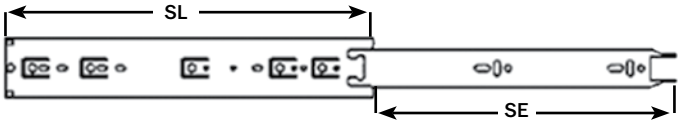

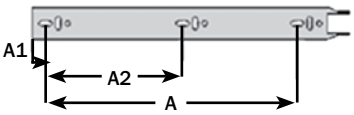

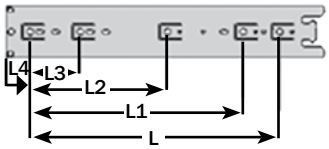

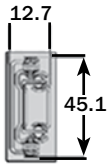

- Length range (closed): 250-700mm
- Travel range 265-715mm
- Wide range of applications
- 'Hold-in facility'
- Load rating up to 45kg/pair
- 100% plus extension rate
- 3 beam multi-extension
- Ball bearing slide mechanism
- Pre-lubricated

Part No.	A (mm)	A1 (mm)	A2 (mm)	L (mm)	L1 (mm)	L2 (mm)	L3 (mm)	L4 (mm)	SL - Slide Length (mm)	SE - Slide Extension (mm)	Loading Wgt. Max. kg per pair	Wgt. (kg) Pair
DGRD2000/250A	192.0	32.0	64.0	--	--	160.0	35.0	250.0	265	64.0	30	0.73
DGRD2000/300A	224.0	32.0	96.0	--	--	224.0	35.0	300.0	311	64.0	35	0.90
DGRD2000/350A	256.0	32.0	96.0	--	--	224.0	35.0	350.0	365	64.0	35	1.06
DGRD2000/400A	320.0	32.0	128.0	--	288.0	224.0	35.0	400.0	412	64.0	40	1.21
DGRD2000/450A	352.0	32.0	160.0	--	352.0	224.0	35.0	450.0	465	64.0	45	1.37
DGRD2000/500A	416.0	32.0	192.0	416.0	352.0	224.0	35.0	500.0	511	64.0	40	1.51
DGRD2000/550A	448.0	32.0	192.0	416.0	352.0	224.0	35.0	550.0	563	64.0	40	1.69
DGRD2000/600A	512.0	32.0	224.0	480.0	352.0	224.0	35.0	600.0	613	64.0	35	1.83
DGRD2000/650A	544.0	32.0	256.0	544.0	352.0	224.0	35.0	650.0	663	64.0	35	2.02
DGRD2000/700A	576.0	32.0	288.0	544.0	352.0	224.0	35.0	700.0	715	64.0	30	2.15

PVC Curtain Strip

No. DGR/CURT200/50CL
wgt. 22.30kg
Colour: Transparent
50mtr x 200mm wide x 2mm thick

Also available to order:
100mtr x 200mm wide x 2mm thick
75mtr x 300mm wide x 3mm thick
50mtr x 400mm wide x 4mm thick

Colours: Red, Green, or Orange

- For use in low temperature environments such as cold stores and refrigeration transport

Hanging Track & Hook on Plates

No. DGR/CURT/TRK984/SS
wgt. 0.87kg
A heavy gauge stainless steel track. Tracks are supplied in 984mm lengths.

No. DGR/CURT/HKSS Stainless steel
wgt. 0.06kg L:200mm
Stainless steel PVC curtain hook on plates. These are used to clamp the PVC curtain strip and simply hook onto the **DGR/CURT/TRK984/SS** hanging track (listed above)

- Simple to fit, the hook design allows for variable strip overlap and damaged strips can be replaced easily
- PVC strips are available in varying widths and thickness

Welwyn Garden City tel +44 (0)1707 371161 fax +44 (0)1707 372603
Coseley tel +44 (0)121 520 0100 fax +44 (0)121 522 3889
website www.cbf.uk.com e-mail: sales@cbf.uk.com

STEEL SECTION

Bearer Section
2.20mm Galvanized Mild Steel

No. ASTL12
wgt. 9.25kg

- L2550 x H100 x W50mm

Bearer Section
2.20mm Self Colour Mild Steel

No. ASTL42
wgt. 18.00kg

- L5000 x H100 x W50mm

Floor Wearing Strip
Self Colour Mild Steel

No. ASTL172/5250
wgt. 1.78kg

- L5250 x W28.5 x T1.05mm

Treadplate
Self Colour Mild Steel

No. ASTL1002 3 row
wgt. 2.60kg

- L3048 x W35 x D6.5mm (overall)
- 4mm Steel

Q-Grating Planks
Galvanized Steel, Self Colour Steel, Stainless Steel & Mill Finish Aluminium

Highly aggressive grating, manufactured with a walking surface consisting of a high slip resistant diamond pattern matrix. The diamond pattern has a serrated surface and load supporting side flange.

- 38 or 51mm Depths
- Aluminium: 3mm material
- Steel: 2mm material
- 47 x 15mm Hole size
- High load capacity
- All sizes available to order

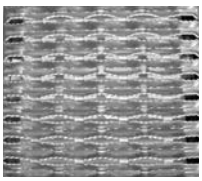

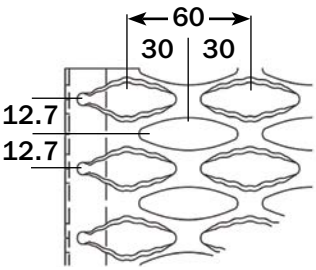

Mild Steel

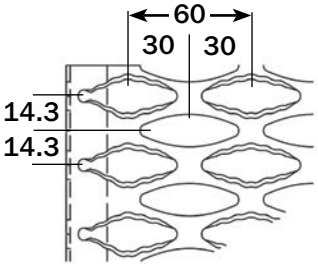

Aluminium/Stainless Steel

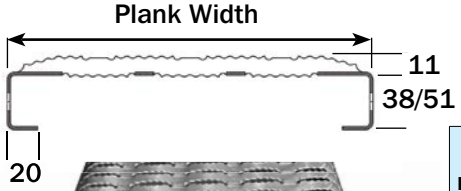

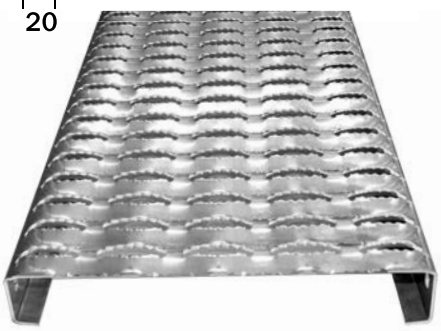

Plank Width (mm)	Depth (mm)	No. of Holes	Length (mm)	Mild Steel Weight Kg/m²		Aluminium Weight Kg/m²
				Depth 38mm	Depth 51mm	Depth 51mm
120	38/51	2	3048	40.5	43.2	17.5
180	38/51	3	3048	32.4	34.8	14.0
240	38/51	4	3048	28.8	30.6	12.5
300	38/51	5	3048	26.2	34.7	11.5
360	38/51	6	3048	24.8	26.1	11.0
420	38/51	7	3048	23.9	24.7	10.5

STEPS

Underbody Access Step – Galvanized
2-Rung, Heavy Duty

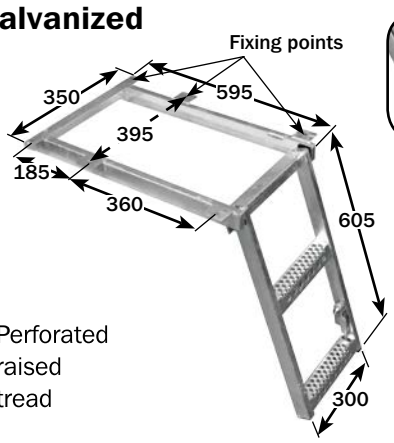

Transit latch

No. ABUS871/BRGV
wgt. 6.00kg

2 Rung
Step: L605 x W300mm
Frame: L595 x W350mm

- All steel construction
- Six fixing points: Ø10mm
- Safe working load: 136kgs (rated on the bottom rung)
- Fully galvanized to ISO 1461
- Perforated raised tread
- Spring assisted transit latch for stowage

Perforated raised tread

Underbody Access Step – Galvanized
3-Rung, Heavy Duty

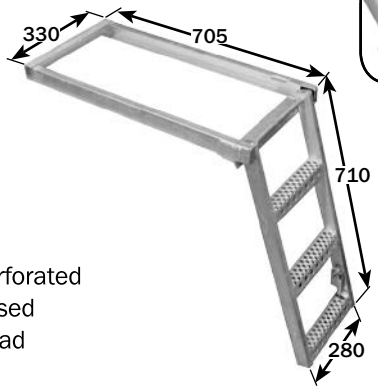

Transit latch

No. ABUS873/BRGV
wgt. 7.20kg

3 Rung
Step: L710 x W280mm
Frame: L705 x W330mm

- All steel construction
- Underbody fixing by welding to chassis
- Safe working load: 136kgs (rated on the bottom rung)
- Fully galvanized to ISO 1461
- Perforated raised tread
- Spring assisted transit latch for stowage
- Supplied without fixing points

Perforated raised tread

Underbody Access Step with Platform – Galvanized
2-Rung, Heavy Duty

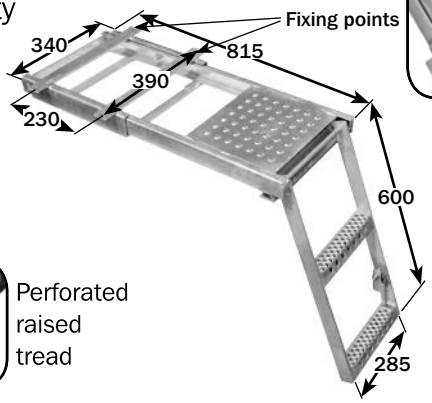

Transit latch

No. ABUS876/BRGV
wgt. 11.20kg

2 Rung
Step: L600 x W285mm
Frame: L815 x W340mm

- All steel construction
- Platform size: W285 x L250mm
- Four fixing points: Ø11mm
- Fully galvanized to ISO 1461
- Safe working load: 136kgs (rated on the bottom rung)
- Perforated raised tread
- Spring assisted transit latch for stowage

Perforated raised tread

Underbody Access Step with Platform – Galvanized
3-Rung, Heavy Duty

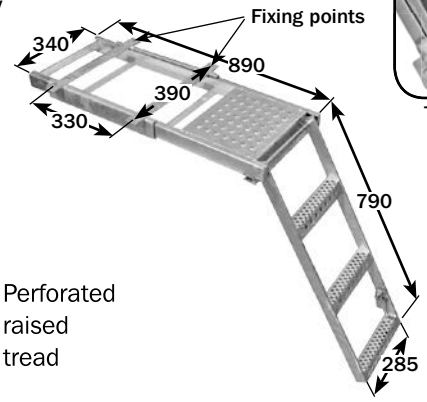

Transit latch

No. ABUS879/BRGV
wgt. 16.00kg

3 Rung
Step: L790 x W285mm
Frame: L890 x W340mm

- All steel construction
- Platform size: W285 x L250mm
- Four fixing points: Ø11mm
- Safe working load: 136kgs (rated on the bottom rung)
- Fully galvanized to ISO 1461
- Perforated raised tread
- Spring assisted transit latch for stowage

Perforated raised tread

Welwyn Garden City tel +44 (0)1707 371161 fax +44 (0)1707 372603
Coseley tel +44 (0)121 520 0100 fax +44 (0)121 522 3889
website www.cbf.uk.com e-mail: sales@cbf.uk.com

STEPS

Underbody Access Step, Multi-Hole Fixings – Galvanized
2-Rung, Heavy Duty

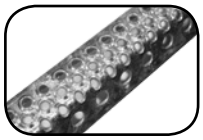
Perforated raised tread

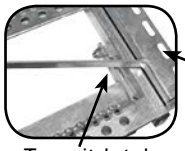
Transit latch

Multi-hole fixing points

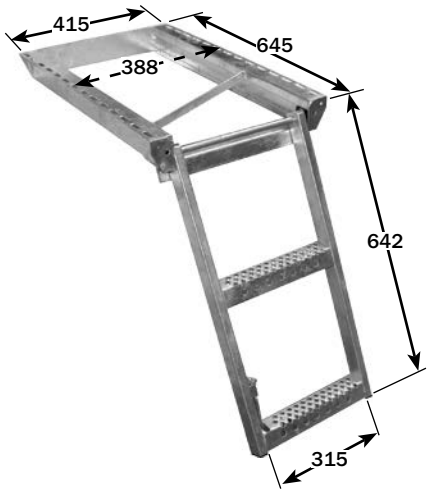

No. ABUS971/MFGV 2 Rung
wgt. 9.20kg L642 x W315mm

- Multi-Hole fixing points: 30 x 11mm slots
- Safe working load: 136kgs (rated on the bottom rung)
- Fully galvanized to ISO 1461
- Perforated raised tread
- Spring assisted transit latch for stowage

Underbody Access Step, Multi-Hole Fixings – Galvanized
3-Rung, Heavy Duty

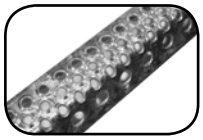
Perforated raised tread

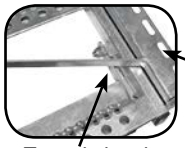
Transit latch

Multi-hole fixing points

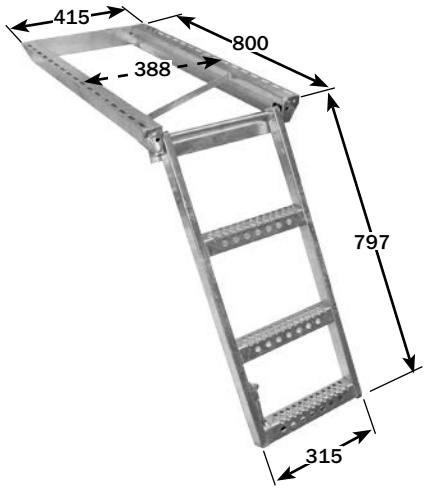

No. ABUS973/MFGV 3 Rung
wgt. 10.20kg L797 x W315mm

- Multi-Hole fixing points: 30 x 11mm slots
- Safe working load: 136kgs (rated on the bottom rung)
- Fully galvanized to ISO 1461
- Perforated raised tread
- Spring assisted transit latch for stowage

Underbody Access Step, Multi-Hole Fixings – Zinc Plated
3-Rung, Medium Duty

'Snap' catch retainer

Perforated raised tread

Multi-hole fixing points

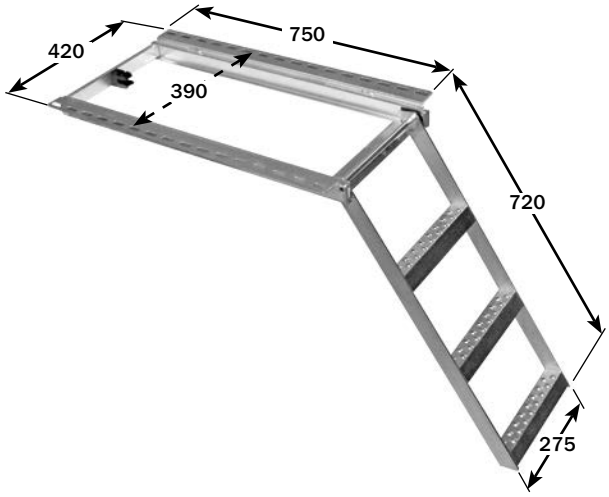

No. ABUS8625/BRZP 3 Rung
wgt. 7.45kg Step: L720 x W275mm
Frame: L750 x W420mm

- All steel construction
- Multi-Hole fixing points: 30 x 11mm slots
- Safe working load: 110kgs (rated on the bottom rung)
- Fully zinc plated
- Perforated raised tread
- Plastic 'snap-catch' retainer

STEPS

Sliding Ladder Step – 2 Rung
Galvanized

THE escalier RANGE

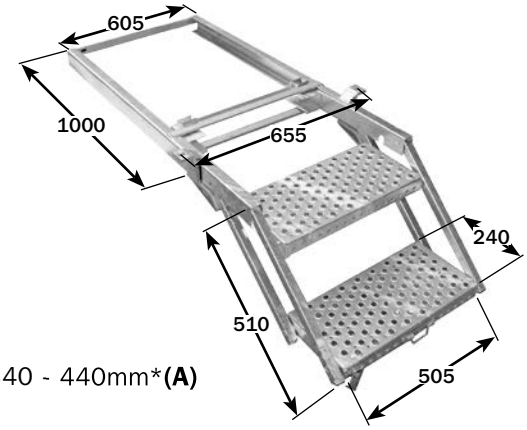

No. ABUS2600B/GV 2 Rung
wgt. 30kg Frame: L1000x W605mm
Tread: D240 x W505mm

- All steel construction
- Easy-Glide rollers to aid operation*(**E**)
- Pull handle*(**B**)
- Gravity safety catch*(**C**)
- 4 Fixing points
- Self-Cleaning patented honeycomb tread*(**D**)
- 'U' bracket – allows the height/angle of the ladder to be adjusted: 340 - 440mm*(**A**)
- Fully galvanized to ISO 1461
- Detailed drawings and safe working load details available upon request

**See page 246 for more information*

Sliding Ladder Step – 3 Rung
Galvanized

THE escalier RANGE

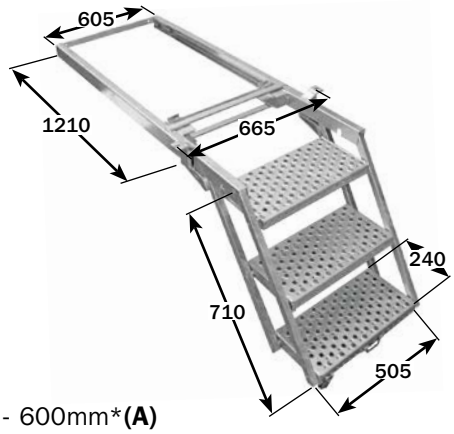

No. ABUS3600B/GV 3 Rung
wgt. 35kg Frame: L1210 x W605mm
Tread: D240 x W505mm

- All steel construction
- Easy-Glide rollers to aid operation*(**E**)
- Pull handle*(**B**)
- Gravity safety catch*(**C**)
- 4 Fixing points
- Fully galvanized to ISO 1461
- Self-Cleaning patented honeycomb tread*(**D**)
- 'U' bracket – allows the height/angle of the ladder to be adjusted: 500 - 600mm*(**A**)
- Detailed drawings and safe working load details available upon request

**See page 246 for more information*

Sliding Ladder Step – 4 Rung
Galvanized

THE escalier RANGE

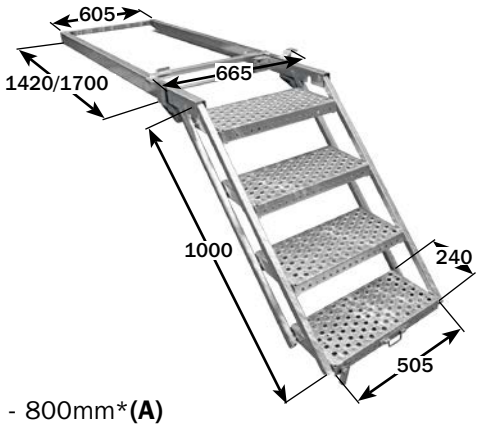

No. ABUS4600B/1700GV 4 Rung – '*extended*' *frame length*
wgt. 65kg Frame: L1700 x W605mm
Tread: D240 x W505mm

No. ABUS4600B/GV 4 Rung
wgt. 60kg Frame: L1420 x W605mm
Tread: D240 x W505mm

- All steel construction
- Easy-Glide rollers to aid operation*(**E**)
- Pull handle*(**B**)
- Gravity safety catch*(**C**)
- 4 Fixing points
- Fully galvanized to ISO 1461
- Self-Cleaning patented honeycomb tread*(**D**)
- 'U' bracket – allows the height/angle of the ladder to be adjusted: 700 - 800mm*(**A**)
- Detailed drawings and safe working load details available upon request

**See page 246 for more information*

Welwyn Garden City tel +44 (0)1707 371161 fax +44 (0)1707 372603
Coseley tel +44 (0)121 520 0100 fax +44 (0)121 522 3889
website www.cbf.uk.com e-mail: sales@cbf.uk.com

STEPS

Sliding Ladder Step – 4 Rung ' Narrow'
Galvanized

THE escalier RANGE

No. ABUS4450/GV
wgt. 46kg

4 Rung
Frame: L1500 x W460mm
Tread: D240 x W370mm

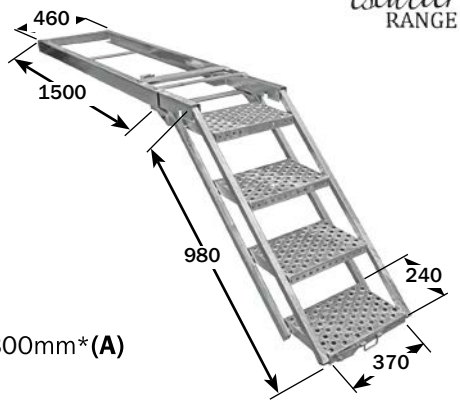

- All steel construction
- Easy-Glide rollers to aid operation*(**E**)
- Pull handle*(**B**)
- Gravity safety catch*(**C**)
- 6 Fixing points
- Fully galvanized to ISO 1461
- Self-Cleaning patented honeycomb tread*(**D**)
- 'U' bracket – allows the height/angle of the ladder to be adjusted: 700 - 800mm*(**A**)
- Detailed drawings and safe working load details available upon request

**See page 246 for more information*

Telescopic Sliding Ladder Step – 4 Rung
Galvanized

THE escalier RANGE

No. ABUSNR4356/GV
wgt. 25kg

4 Rung
Frame: L630 x W510mm
Tread: D125 x W355mm

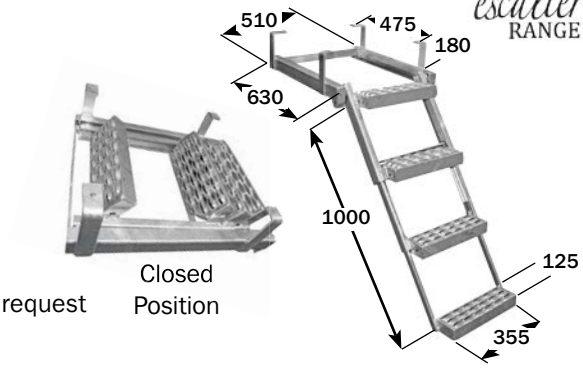

- All steel construction
- Fully galvanized to ISO 1461
- 4 Fixing points
- Self-cleaning raised grate tread
- Detailed drawings and safe working load details available upon request
- ***3 Rung version available upon request***

**See page 246 for more information*

Cassette Step
Galvanized

THE escalier RANGE

No. ABUSNR1720/GV
wgt. 15kg

Frame: L560 x W725mm
Tread: D240 x W630mm

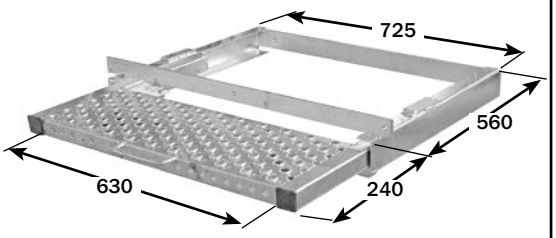

- All steel construction
- Pull handle
- Heavy duty design
- 4 Fixing points
- Fully galvanized to ISO 1461
- Self-Cleaning patented honeycomb tread*(**D**)
- Detailed drawings and safe working load details available upon request

**See page 246 for more information*

Pivotal Step
Galvanized

THE escalier RANGE

No. ABUSNR1780/GV
wgt. 8.50kg

Frame: H305 x W60mm
Tread: D240 x W765mm

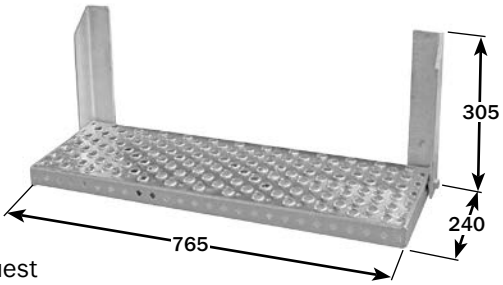

- All steel construction
- 2 Fixing points
- Locks securely into position when opened and closed
- Fully galvanized to ISO 1461
- Self-Cleaning patented honeycomb tread*(**D**)
- Detailed drawings and safe working load details available upon request

**See page 246 for more information*

STEPS

Sliding Ladder Step complete with Automatic Double Handrails

Galvanized

THE escalier RANGE

When climbing or working from a ladder, three points of contact should be maintained. The 'Escalier' double handrail steps ensure the operator can enter and exit the vehicle without the risk of falling.

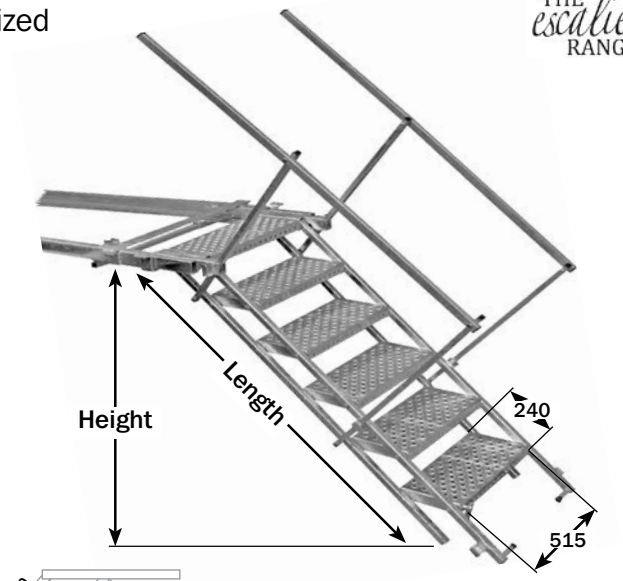

No. ABUSNR6595RG/GV
wgt. 80kg

6 Rung
Frame: L2270 x W750mm
Tread: D240 x W515mm
Length: 1740mm

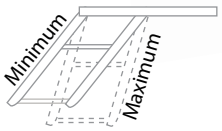

- 'U' bracket – allows the height/angle of the ladder to be adjusted: *minimum* 950 - 1100mm *maximum**(A)

No. ABUSNR7595RG/GV
wgt. 95kg

7 Rung
Frame: L2560 x W750mm
Tread: D240 x W515mm
Length: 2030mm

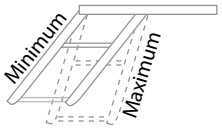

- 'U' bracket – allows the height/angle of the ladder to be adjusted: *minimum* 1100 - 1250mm *maximum**(A)

No. ABUSNR8595RG/GV
wgt. 105kg

8 Rung
Frame: L2850 x W750mm
Tread: D240 x W515mm
Length: 2320mm

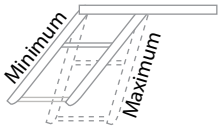

- 'U' bracket – allows the height/angle of the ladder to be adjusted: *minimum* 1250 - 1400mm *maximum**(A)

Features

- All steel construction
- Easy-Glide rollers to aid operation***(E)**
- Gravity safety catch***(C)**
- Fully galvanized to ISO 1461
- Self-Cleaning patented honeycomb tread***(D)**
- Double handrails simply 'pop-up' when the step is drawn out and retract when stowed
- Offers '3 points of contact' essential for correct use of a ladder – HSE
- Detailed drawings and safe working load details available upon request

See below for more information

A
'U' BRACKET
adjusts the length and angle of ladder

B
PULL HANDLE

C
GRAVITY SAFETY CATCH

D
PATENTED RAISED HONEYCOMB TREAD

E
EASY-GLIDE ROLLERS

Welwyn Garden City tel +44 (0)1707 371161 fax +44 (0)1707 372603
Coseley tel +44 (0)121 520 0100 fax +44 (0)121 522 3889
website www.cbf.uk.com e-mail: sales@cbf.uk.com

STEPS

Fully Detachable Load-Step
Aluminium

No. ABUSH2LL04/1175AL 4 Rung
wgt. 7.00kg Working height: 950 - 1175mm

No. ABUSH2LL05/1400AL 5 Rung
wgt. 8.00kg Working height: 1175 - 1400mm

- Heavy duty design
- Designed for high frequency use
- Simple height adjustment within ranges
- Single dual position handle enables easy access to vehicle bed
- Access platform provides stability and anti-slip surface
- Integral tie allows the ladder to be secured to the vehicle during use
- Fully detachable
- Supplied with easily installed bracket and padlock for secure storage
- Lightweight, corrosion resistant construction
- BS2037/1129 CLASS 1 Approved
- Safe working load: 130kg

Under-Body Access Step
Heavy Duty

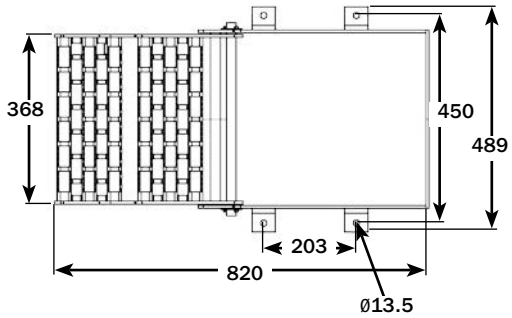

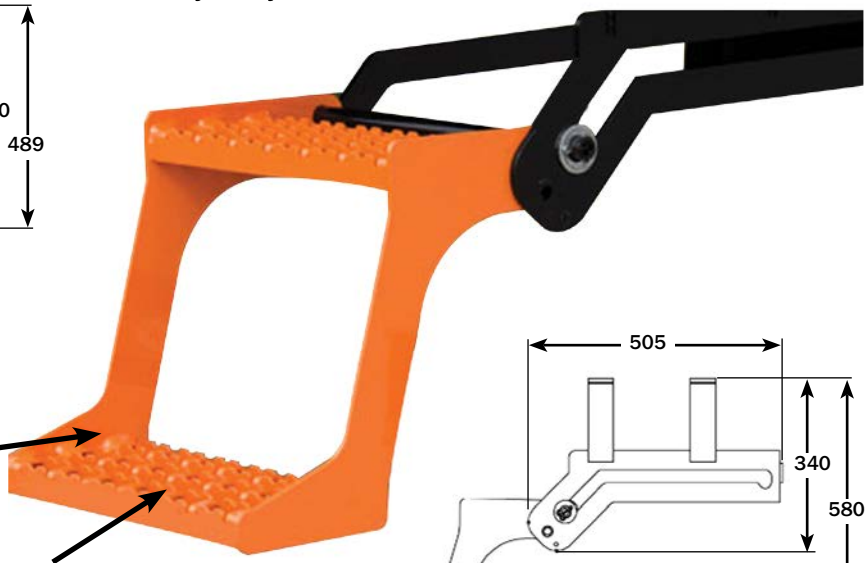

High side-wall for secure foot placement

Robust gripping tread design

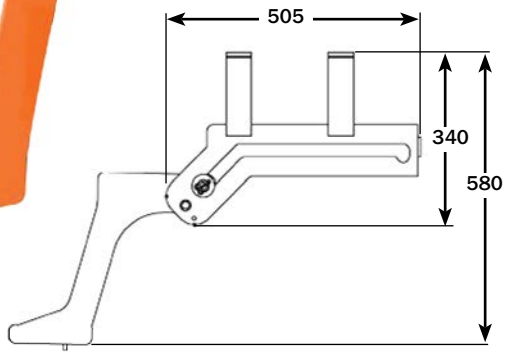

No. ABUS0126/1004/ORA
wgt. 14.50kg

- Simply lift and stow / stows securely into frame
- Supplied with wire and catch, secondary security device
- High visibility powder coated
- Can be bolted or welded into position
- Safe working load: 225kg
- All steel construction

STEPS

Tail Lift Tuck-Away Access Step
Galvanized

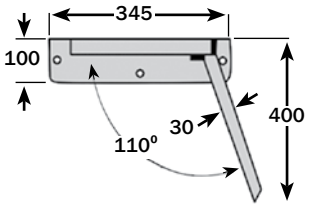

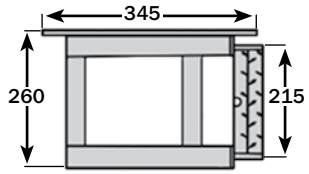

No. ABUS882/BRGV Single rung
wgt. 8.70kg L400 x W215mm

- Bolts directly onto underside of tail lift framework
- 3 x Ø11mm Fixing points
- Galvanized to ISO 1461

Folding Step – Heavy Duty
Galvanized

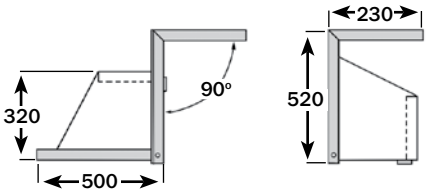

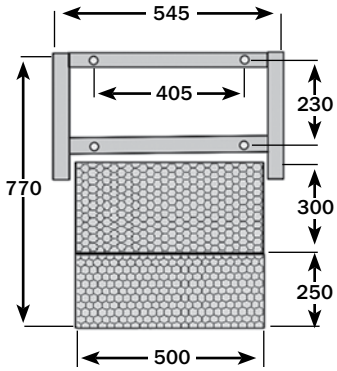

No. ABUS2219 2 Rung
wgt. 14.60kg

- Overcentre folding action for secure storage
- Safe working load: 140kg
- Honeycomb self cleaning treads
- Under chassis fixing – 4 x M10 bolts (not supplied)
- Galvanized to ISO 1461

Stirrup Steps
Galvanized

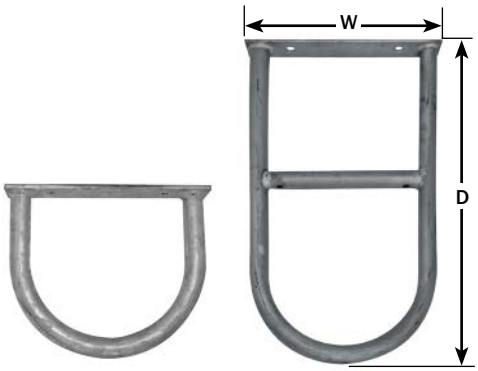

No. ABUS4324 Single rung
wgt. 1.32kg W250 x D210mm
No. ABUS2353 Single rung
wgt. 1.67kg W245 x D305mm
No. ABUS2355 2 Rung
wgt. 2.60kg W245 x D505mm

- Robust construction
- 2 x Ø11mm Fixing points
- Galvanized to ISO 1461

Drop-Down Access Step
Galvanized

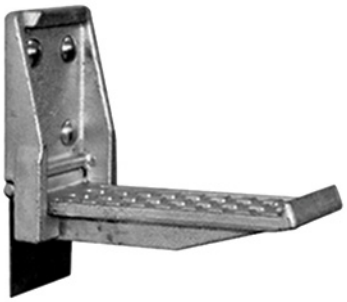

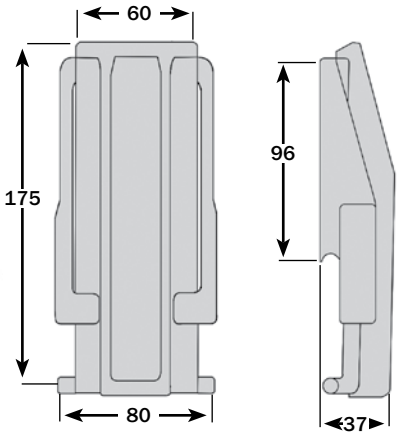

No. ABUS1122/175GV
wgt. 1.00kg

- Only 38mm protrusion
- 4 x Ø6.5mm Fixing points
- Robust tread area
- Design load 250kg
- Galvanized to ISO 1461

Registered Design
No. 000911672-0001

Welwyn Garden City tel +44 (0)1707 371161 fax +44 (0)1707 372603
Coseley tel +44 (0)121 520 0100 fax +44 (0)121 522 3889
website www.cbf.uk.com e-mail: sales@cbf.uk.com

STEPS

Folding Access Step
Heavy Duty

No. ABUS2295/ZP Zinc plated
wgt. 1.43kg

- Plate: H130 x W90mm
- 2 x Ø8mm Fixing holes
- Stainless steel spring
- Safe working load: 180kg

Folding Access Step
Medium Duty

No. ABUS2248/SS Stainless steel
wgt. 0.51kg

No. ABUS2248/ZP Zinc plated
wgt. 0.51kg

- Plate: H120 x W47mm
- 2 x Ø8mm Fixing holes
- Stainless steel spring

Folding Access Step
Heavy Duty

No. ABUS2288/GP Investment cast
wgt. 1.50kg Zinc / gold passivation

- Plate: H160 x W152mm
- 4 x Ø8.5mm Fixing holes
- Safe working load: 150kg

Recessed Foot Step
Aluminium

No. ABUS1029 Cast aluminium / polished face
wgt. 0.53kg Face: W163 x D140mm

- 4 x Ø6mm Fixing holes

Cut-out: W122 x D100 x D80mm

Recessed Foot Step
Black nylon

No. ABUS1029/PL Black nylon
wgt. 0.38kg Face: W165 x D142mm
Cut-out: W120 x D100 x D92mm

- Glass filled nylon construction
- Neoprene seal
- UV stable
- 4 x Ø6mm Fixing holes

TAILBOARD LOCKS

Recessed Overcentre Lock
Zinc Plated / Stainless Steel

No. ATBF894/ZPSS Zinc plated
wgt. 1.44kg

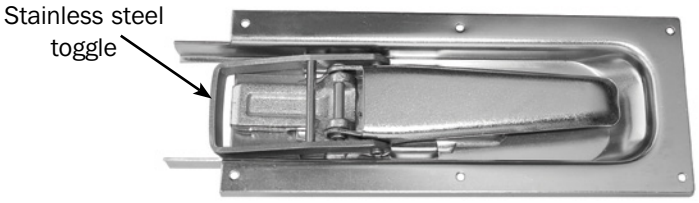

- 304G Stainless steel toggle and pins
- Pan: L290 x W120 x D23mm
- Cut-out: L300 x W80 x D21mm
- Spring loaded toggle
- 6 x Ø5mm fixing holes
- All hard wearing components are stainless steel to prevent corrosion
- See below for catch options

Recessed Overcentre Lock
Stainless Steel

No. ATBF894/SS 304G Polished stainless steel
wgt. 1.44kg

- Pan: L290 x W120 x D23mm
- Cut-out: L300 x W80 x D21mm
- Spring loaded toggle
- 6 x Ø5mm fixing holes
- Corrosion resistant
- Manufactured entirely from stainless steel
- See below for catch options

Overcentre Lock Catch Plate
Self Colour / Weld On

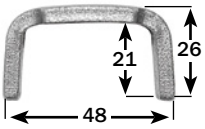

No. ATBF894/WCSC
wgt. 0.06kg

- 5mm mild steel

Overcentre Lock Catch Plate
304 Grade Stainless Steel / Bolt On

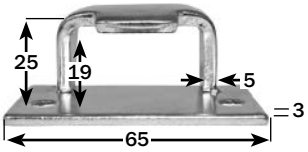

No. ATBF894/BCSS
wgt. 0.09kg

- 2 x Ø6.5mm fixing holes

Recessed Overcentre Lock
Zinc Plated

No. ATBF794B Spring loaded
wgt. 1.47kg

Supplied with self colour weld on catch plate

- Pan: L290 x W120 x D25mm
- Cut-out: L310 x W80 x D23mm
- 6 x Ø6mm fixing holes

Welwyn Garden City tel +44 (0)1707 371161 fax +44 (0)1707 372603
Coseley tel +44 (0)121 520 0100 fax +44 (0)121 522 3889
website www.cbf.uk.com e-mail: sales@cbf.uk.com

TAILBOARD LOCKS

Surface Mounted Overcentre Lock
Zinc Plated

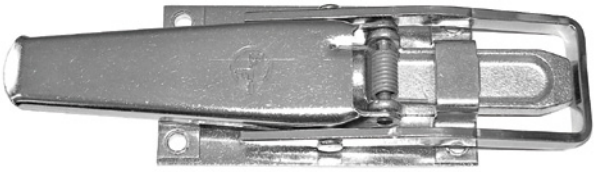

No. ATBF746B Spring loaded
wgt. 1.01kg

Supplied with self colour weld-on catch plate

- Backplate: L150 x W80mm
- 4 x Ø8mm fixing holes

Recessed Overcentre 'T' Lock
Galvanized

No. ATBF0700101000/GV Recessed Lock Assembly Galvanized
wgt. 1.50kg

No. ATBF0600100122/SC Pillar Socket, Weld-on Self Colour
wgt. 0.12kg

No. ATBF0700100500/60 T-Piece (short reach) 60mm Galvanized
wgt. 0.10kg

No. ATBF0700100400/95 T-Piece (long reach) 95mm Galvanized
wgt. 0.13kg

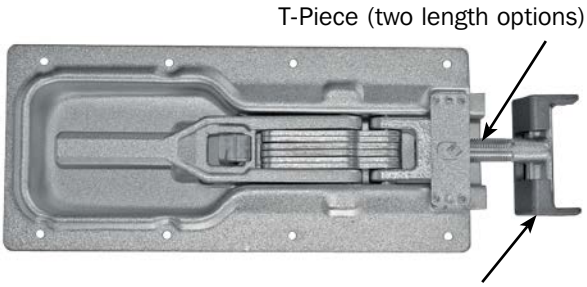

T-Piece

- Pan: L270 x W120 x D23mm
- Cut-out: L270 x W78mm (max)
- Automatic safety catch
- 8 x Ø5mm fixing holes
- Great tension capacity
- Double safety mechanism
- Smooth galvanized finish

Recessed 'Locking' Overcentre 'T' Lock
Zinc Plated

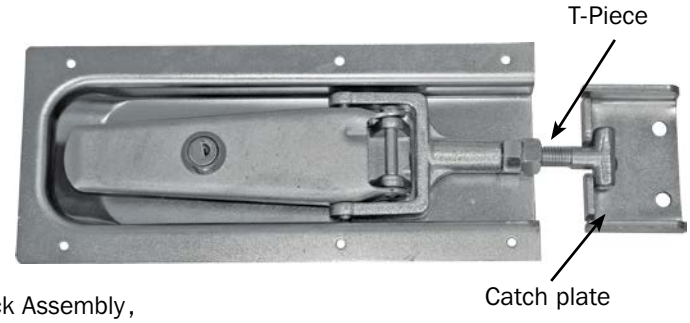

No. ATBF994/ZP Complete Recessed Lock Assembly, includes 'T'-Piece and catch plate
wgt. 1.30kg

T-Piece

- Pan: L275 x W120 x D24mm
- Cut-out: W265 x W79 x D23mm
- 6 x Ø5mm Flxing holes
- Catch plate: L55 x W80 x D24mm, complete with 2 x Ø8.5mm fixing holes
- Supplied complete with locking barrel & 2 keys
- Supplied complete with catch plate
- Zinc plated

TAILBOARD LOCKS

Surface Mounted Overcentre Lock
Zinc Plated

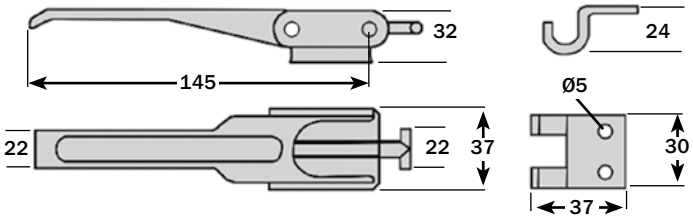

No. ATBF80598
wgt. 0.25kg

Fastener and Catch Plate
Adjustable T Catch, 27-48mm

- 3 x Ø5.3mm fixing holes

Surface Mounted Overcentre Lock
Zinc Plated

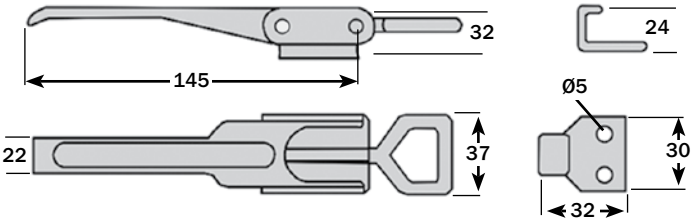

No. ATBF80600
wgt. 0.27kg

Fastener and Catch Plate
Adjustable Ring Catch, 50-65mm

- 3 x Ø5.3mm fixing holes

Eccentric Fastener
Adjustable Fastener with Safety Device

Weld on catch

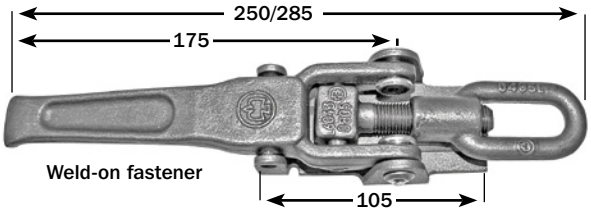

No. ATBF6043/WSC
wgt. 0.89kg

Weld on Fastener
Self Colour

No. ATBF6044/WSC
wgt. 0.07kg

Weld-on Catch
Self Colour

Widely used on tippers & car trailers. Other applications include toolboxes & transport containers
! This product requires periodic maintenance (i.e. lubrication, adjustment or replacement of wearing parts)

Eccentric Fastener
Adjustable Fastener with Safety Device

Weld on catch

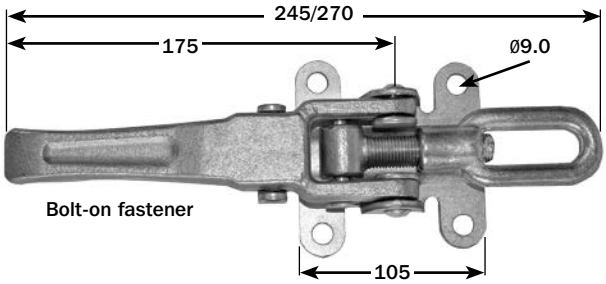

No. ATBF7655/BGV
wgt. 0.89kg

Bolt on Fastener
Galvanized

- Supplied complete with weld-on catch / self colour

Widely used on tippers & car trailers. Other applications include toolboxes & transport containers
! This product requires periodic maintenance (i.e. lubrication, adjustment or replacement of wearing parts)

Welwyn Garden City tel +44 (0)1707 371161 fax +44 (0)1707 372603
Coseley tel +44 (0)121 520 0100 fax +44 (0)121 522 3889
website www.cbf.uk.com e-mail: sales@cbf.uk.com

TAPES

Adhesive Strip

0485 Rubber Resin

Solvent free rubber resin hot melt adhesive

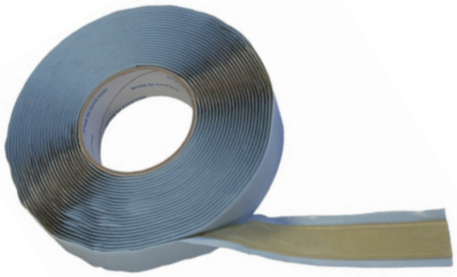

Product Benefits

- Clean, easy to use alternative to brush on adhesives
- Very aggressive pressure sensitive adhesive
- Non-hardening and permanently flexible
- Poly coated release liner
- Excellent bond strength
- No curing time required
- Solvent free
- Forms a strong waterproof bond
- Well established product with long term proven success
- Versatile 'instant-stick' on a roll

Applications

- Joining of plastic sheeting
- Bonding lightweight insulation panels, kickplates, etc.
- Mounting lightweight trim
- As a temporary 'third-hand' fix
- Bonding of insulation to walls
- Fixing of edging, sheeting, signs & tiles
- Fixing roof bars on commercial vehicles
- Fixing of carpets, decorative edging, board & trims

Part No.	Width x Depth mm	Roll size metres	Colour	wgt. kg/roll
SEAL0485/112	12 x 1.0	20	Amber	0.32
SEAL0485/1904	19 x 0.4	30	Amber	0.36
SEAL0485/119	19 x 1.0	20	Amber	0.46
SEAL0485/119/50	19 x 1.0	50	Amber	1.15
SEAL0485/219	19 x 2.0	10	Amber	0.43
SEAL0485/2504	25 x 0.4	30	Amber	0.50
SEAL0485/125	25 x 1.0	20	Amber	0.57
SEAL0485/225	25 x 2.0	10	Amber	0.53

- Product data sheet available upon request

Recommendations

It is recommended that this product is applied at temperatures over 10°C.

To aid the cutting of 0485, it is advisable to dip blades or scissors into water immediately prior to use.

Note: Should not be used where good chemical or UV resistance is required.

Double Sided Tape

5164 PVC Foam

General purpose double-sided foam bonding tape

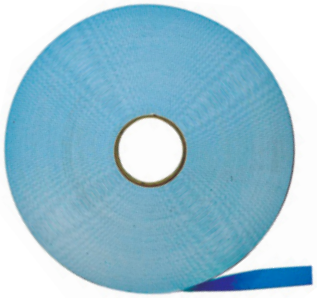

Product Benefits

- Maximum recommended weight loading of 7g/cm²
- Service temperature -40°c to +70°c
- Application temperature +10°c to +40°c
- Shelf life of 1 year
- Minimum 20% compression required to effect a water seal
- Coated on both sides with a high quality pressure sensitive acrylic application
- Good resistance to dilute acids & alkalis
- Poly coated release liner
- Very good ultra-violet (UV) light resistance
- Resistance to abrasion, corrosion and moisture
- Suitable for indoor and outdoor environments
- Clean to use

Applications

- For general mounting/bonding
- For automotive mirror mounting
- For glazing
- Forms a compression water seal
- For preventing electrolytic corrosion

Part No.	Width x Depth mm	Roll size metres	Colour	wgt. kg/roll
SEAL5164/1908	19 x 0.8	60	White	0.49
SEAL5164/1915	19 x 1.5	40	White	0.48
SEAL5164/2503	25 x 3.0	25	White	0.63
SEAL5164/2508	25 x 0.8	60	White	0.62
SEAL5164/2515	25 x 1.5	40	White	0.67
SEAL5164/3808	38 x 0.8	60	White	1.00

- Product data sheet available upon request

Recommendations

Surfaces must be clean, dry, free from grease and dirt. Recommended cleaning agent is Propan-2-ol (IPA).

Manufacturer's safety instructions should be followed and customers are recommended to ensure compatibility of the solvent with their substrate. Ideal bonding substrates are those which are clean, dry, flat, smooth, dust free & non-porous.

TAPES

Double Sided Tape

321 Polyethylene

Medium density polyethylene double sided foam tape

Product Benefits

- Coated on both sides with pressure sensitive acrylic adhesive
- Suitable for indoor and outdoor environments
- Poly coated release liner
- Application temperature: -30°C to +80°C
- No known hazards associated with this product

Applications

- Panel bonding
- General sealing
- Cushioning
- Various uses in the automotive, building & construction industries
- For general mounting and bonding

Recommendations

Surfaces must be clean, dry, free from grease and dirt

Part No.	Width x Depth mm	Roll size metres	Colour	wgt. kg/roll
SEAL321/1910DS	19 x 1.0	40	White	0.60
SEAL321/2510DS	25 x 1.0	40	White	0.86
SEAL321/1920DS	19 x 2.0	40	White	0.64
SEAL321/2520DS	25 x 2.0	40	White	0.90

- Product data sheet available upon request

Single Sided Tape

3507 PVC Foam

General purpose foam compression sealant

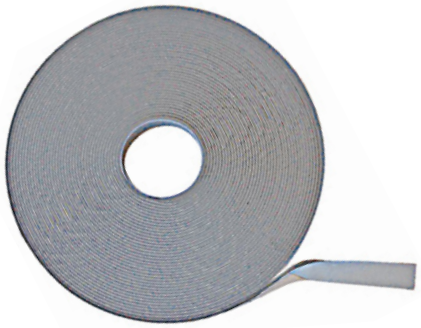

Product Benefits

- Minimum 30% compression required to effect a water seal
- Application temperature: +10°c to +40°c
- Shelf life of 1 year
- Coated on one side with a high quality pressure sensitive acrylic adhesive
- Good resistance to dilute acids & alkalis
- Poly coated release liner
- Very good UV resistance
- Resistance to abrasion, corrosion and moisture
- Suitable for indoor and outdoor environments
- Pre-determined dimensional sealant reduces waste
- Clean to use
- Clean edge finish

Applications

- Forms a compression air/dust/water seal
- For preventing electrolytic corrosion
- For heavy duty cushioning
- For high load bearing applications
- For gap filling
- For anti-slip mounting

Part No.	Width x Depth mm	Roll size metres	Colour	wgt. kg/roll
SEAL3507/1908	19 x 0.8	60	Grey	0.37
SEAL3507/1915	19 x 1.5	50	Grey	0.45
SEAL3507/1903	19 x 3.0	25	Grey	0.45
SEAL3507/2515	25 x 1.5	50	Grey	0.63
SEAL3507/2503	25 x 3.0	25	Grey	0.52

- Product data sheet available upon request

Recommendations

Surfaces must be clean, dry, free from grease and dirt. Recommended cleaning agent is Propan-2-ol (IPA).
Manufacturer's safety instructions should be followed and customers are recommended to ensure compatibility of the solvent with their substrate. Ideal bonding substrates are those which are clean, dry, flat, smooth, dust free & non-porous.

Welwyn Garden City tel +44 (0)1707 371161 fax +44 (0)1707 372603
Coseley tel +44 (0)121 520 0100 fax +44 (0)121 522 3889
website www.cbf.uk.com e-mail: sales@cbf.uk.com

TAPES – ANTI-SLIP

Anti-Slip Grip-Tape

Grip-Tape can be applied onto almost any surface and instantly provides an anti-slip surface that's ready to walk on.

- Excellent performance characteristics
- Superior adhesion
- Easy application
- Can be supplied in rolls between 10mm to 1168mm wide
- Can be supplied in pre-cut 'shaped' sheets

Part No.	Grade	Width (mm)	Colour	Roll Length (m)	Roll Length (feet)	wgt. kg/roll
SEAL3402/25C	COARSE	25	Black	18.3	60	0.38
SEAL3402/50C	COARSE	50	Black	18.3	60	0.76
SEAL3402/100C	COARSE	100	Black	18.3	60	1.52
SEAL3402/150C	COARSE	150	Black	18.3	60	2.28
SEAL3402/25XC	EXTRA COARSE	25	Black	18.3	60	0.60
SEAL3402/50XC	EXTRA COARSE	50	Black	18.3	60	1.20
SEAL3402/100XC	EXTRA COARSE	100	Black	18.3	60	2.40
SEAL3402/150XC	EXTRA COARSE	150	Black	18.3	60	3.60
SEAL3402/50C/YEL	COARSE	50	Yellow	18.3	60	0.76
SEAL3402/25C/BY	COARSE	25	Black/Yellow	18.3	60	0.38
SEAL3402/50C/BY	COARSE	50	Black/Yellow	18.3	60	0.76

BLACK

YELLOW

BLACK/YELLOW

COARSE

EXTRA COARSE

Ancillaries

Grip-Tape Primer

No. SEAL3506/1000SP 1000ml

Surface primer available for sealing porous surfaces, such as wood, concrete or stone prior to application of Grip-Tape. Prevents moisture degrading the adhesive and helps to create an extra bond on other surfaces.

Grip-Tape Edge Fix

No. SEAL3502/140EF 140ml

Prevents the lifting of Grip-Tape in high traffic areas, helps to secure the product and extends its life.

TAPES – MASKING

Paper Masking Tape

A 0.11mm semi crepe paper tape coated with an aggressive rubber/resin solvent based adhesive system. Recommended for all general purpose +80°C masking applications.

No. SEAL9080/25 25mm x 50mtr
wgt. 0.13kg

No. SEAL9080/50 50mm x 50mtr
wgt. 0.26kg

Applications
- Automotive after market masking tape with short term oven baking resistance
- Premium masking tape for building and painters masking applications for indoor use
- Suitable for all general purpose +80°C indoor bonding, holding, sealing and masking applications

Product Benefits
- Clean and easy removal/non-staining
- Smooth and controlled unwind
- Flexible and conformable
- Excellent paint flake resistance
- Good peel adhesion
- Good shear and holding strength
- Resistant to chemicals, lacquers and solvents
- Resistant to oven baking
- Continuous temperature resistance +80°C

Recommendations
Surfaces should be clean, dry and free of dust, grease, oil or other contaminants.

Duct Cloth Tape
Black

Waterproof, multi-purpose cloth tape for both interior and exterior use.

No. SEAL5050/BLK 50mm x 50mtr
wgt. 0.37kg

- Heavy-Duty
- Withstands temperatures: -5°C to +60°C
- Excellent adhesion

Recommendations
Surfaces should be clean, dry and free of dust, grease, oil or other contaminants.

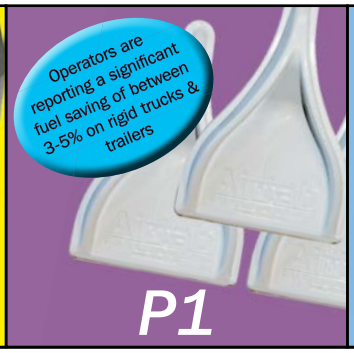

Welwyn Garden City tel +44 (0)1707 371161 fax +44 (0)1707 372603
Coseley tel +44 (0)121 520 0100 fax +44 (0)121 522 3889
website www.cbf.uk.com e-mail: sales@cbf.uk.com

TIPPER FITTINGS

Locking Bar Tab
Self Colour

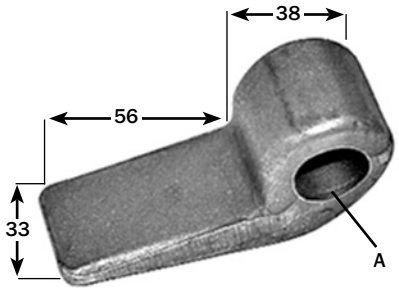

No. ATIP113/20
wgt. 0.39kg
● A = Drilled for Ø20mm bar
No. ATIP113/25
wgt. 0.37kg
● A = Drilled for Ø25mm bar

Locking Bar Hook
Self Colour

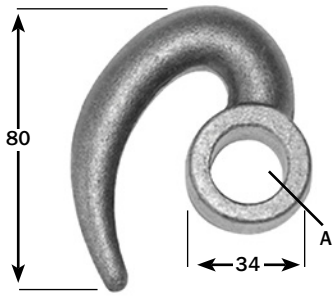

No. ATIP188/20
wgt. 0.28kg
● A = Drilled for Ø20mm bar
No. ATIP188/25
wgt. 0.22kg
● A = Drilled for Ø25mm bar

Locking Bar Bracket
Self Colour & Zinc Plated

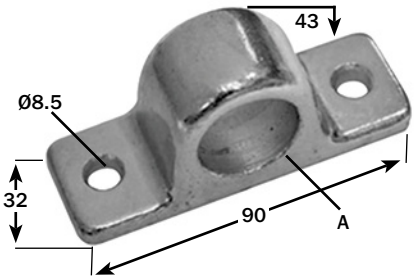

No. ATIP190/20 Self colour
wgt. 0.36kg
● A = Drilled for Ø20mm bar
No. ATIP190/25 Self colour
wgt. 0.31kg
● A = Drilled for Ø25mm bar
No. ATIP190/25ZP Zinc plated
wgt. 0.31kg
● A = Drilled for Ø25mm bar

Locking Bar Bracket
Heavy Duty, Self Colour

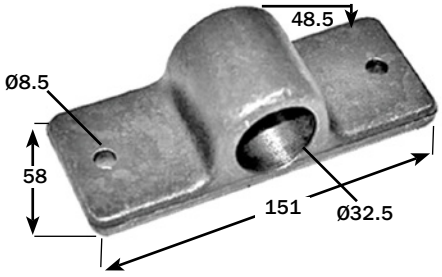

No. ATIP190/32
wgt. 0.27kg
● Drilled for Ø32mm bar

Fastener for Locking Bar Handle
Zinc Plated

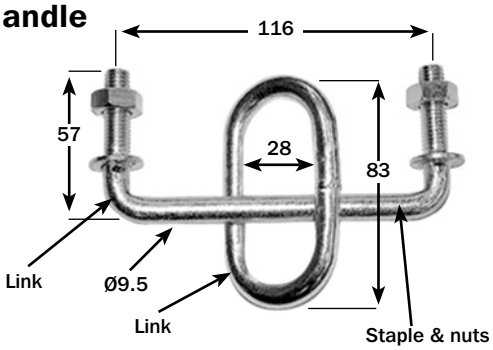

No. ATIP208/S
wgt. 0.14kg
● Staple & nuts
No. ATIP38
wgt. 0.08kg
● Link only

TIPPER FITTINGS

Catch & Pin
Self Colour / Zinc Plated

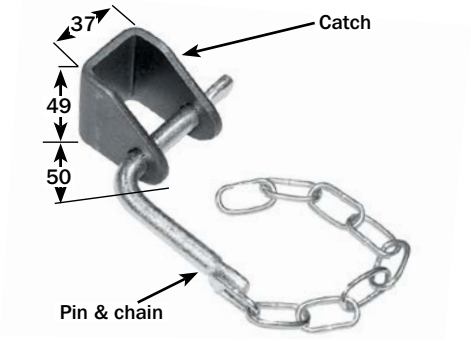

No. ATIP254/C Catch only
wgt. 0.18kg Self colour
● To suit 25mm handle

No. ATIP254/P Pin & chain
wgt. 0.18kg Zinc plated

Locking Bar Tab
Self Colour

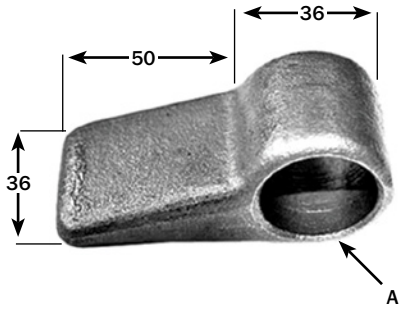

No. ATIP292/20
wgt. 0.38kg
● A = Drilled for Ø20mm bar
No. ATIP292/25
wgt. 0.35kg
● A = Drilled for Ø25mm bar

Lug Weld on
Self Colour

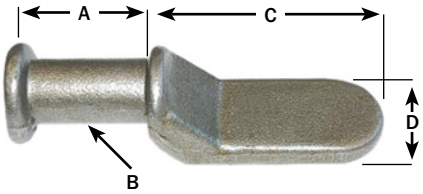

No. ATIP308/20 To suit 20mm forket
wgt. 0.36kg
A = 38mm B = 20mm
C = 96mm D = 31mm

No. ATIP308/25 To suit 25mm forket
wgt. 0.55kg
A = 45mm B = 25mm
C = 90mm D = 38mm

Tailboard Forket
Weld on, Self Colour

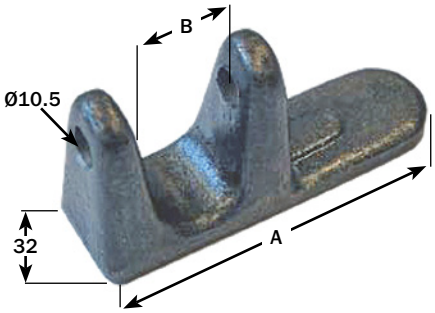

No. ATIP309/20 Jaws for 20mm bar
wgt. 0.32kg
A = 90mm B = 27mm

No. ATIP309/25 Jaws for 25mm bar
wgt. 0.38kg
A = 110mm B = 33mm

Tailboard Forket
Weld on, Self Colour

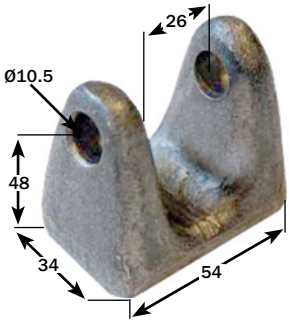

No. ATIP331 To suit 20mm bar
wgt. 0.31kg
● To suit **ACOT215/10** Pin, **ATIP308/20** Tailboard Lug

Welwyn Garden City tel +44 (0)1707 371161 fax +44 (0)1707 372603
Coseley tel +44 (0)121 520 0100 fax +44 (0)121 522 3889
website www.cbf.uk.com e-mail: sales@cbf.uk.com

TIPPER FITTINGS

Staple
Zinc Plated

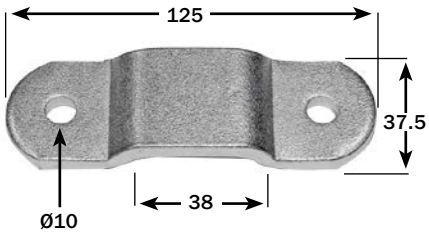

No. AMSC50/08
wgt. 0.31kg
- Drop forged steel

Zinc plated

Lug
Weld on / Self Colour

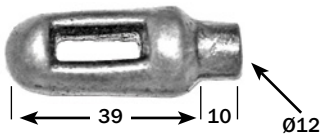

No. AMSC54/08
wgt. 0.05kg
- Drop forged steel

Self colour
Slot: 18 x 5mm

Lug
Bolt on / Zinc Plated

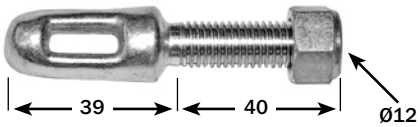

No. AMSC66/40
wgt. 0.09kg
- Supplied complete with nyloc nut
- Slotted to accept **ACOT10A/SC**, **ACOT10A/ZP**, **ACOT13/SC**, **ACOT13/ZP** cotter pins

Zinc plated
Slot: 18 x 5mm

Shoulder Pin
Weld on / Self Colour

No. ATIP80/90
wgt. 0.30kg
- Drop forged steel

Self colour

Keep up-to-date with all the latest products at

www.cbf.uk.com

TOOLBOXES – PLASTIC

Toolboxes
Plastic
CABX RANGE

All Jonesco plastic toolboxes are suited for vehicle fitment and can be incorporated in the side-guard in accordance with UNECE Regulation 73. The required tests were carried out and certified under the supervision of UTAC.

Part No.	Length (mm)	Height (mm)	Depth (mm)	Fixings	Recommended Load Weight (Standard Fitment)*	Wgt. (kg)
CABX45	450	380	400	Integral	50kg	5.00
CABX52	520	360	360	Integral	50kg	5.00
CABX58	580	400	450	Integral	50kg	7.00
CABX62A	620	360	400	Integral	50kg	6.00
CABX62	620	360	610	see page 261	75kg	8.00
CABX65	650	500	480	see page 261	75kg	9.00
CABX80A	800	500	360	Integral	75kg	9.00
CABX80	800	500	480	see page 261	75kg	11.00
CABX100	1000	500	480	see page 261	75kg	14.00
CABX120	1200	500	480	see page 261	75kg	16.00

**Additional load may be carried if a support base shelf is added and the bracketry is reinforced accordingly*

- **CABX45**, **52**, **58**, **62A** & **80A** have integral fixing for fitment directly to the floor of the vehicle (see dimension chart below)
- **CABX62**, **65**, **80**, **100** & **120** are better fitted using our support bracketry which ensures heavy loads do not cause damage to the box
- Other colours available to special order (subject to minimum order quantity)
- Single handle 3-point locking mechanism
- Handle dust cover
- All logos are laser engraved as standard
- Fully recyclable, chemical resistant, UV stabilised PE
- May be incorporated in the sideguard in accordance with Regulation 73
- For fitting kits see page 261

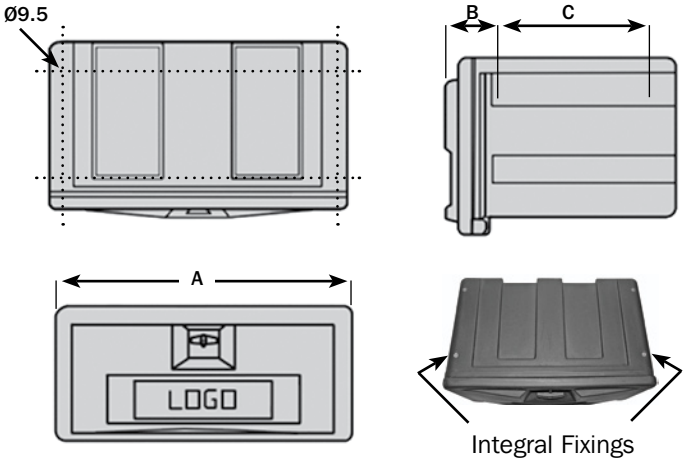

Integral Fixings

Integral Fixing Dimensions			
Part No.	**A (mm)**	**B (mm)**	**C (mm)**
CABX45	400	120	230
CABX52	470	120	190
CABX58	530	120	265
CABX62A	570	120	230
CABX80A	740	120	205

CABX45

A monogramming service is available (Subject to minimum order quantity)

No. CABX/JBXLOCK Replacement Handle Set
wgt. 0.22kg

- Suits all Jonesco CABX plastic toolboxes
- Supplied with dust cover
- Other spares available upon request

CABX62A

Welwyn Garden City tel +44 (0)1707 371161 fax +44 (0)1707 372603
Coseley tel +44 (0)121 520 0100 fax +44 (0)121 522 3889
website www.cbf.uk.com e-mail: sales@cbf.uk.com

TOOLBOXES – PLASTIC

Toolboxes
Plastic
TIGA-BOX RANGE

All Jonesco plastic toolboxes are suited for vehicle fitment and can be incorporated in the side-guard in accordance with UNECE Regulation 73. The required tests were carried out and certified under the supervision of UTAC.

Part No.	Length (mm)	Height (mm)	Depth (mm)	Fixings / Mounting Kit	No. of Handles	Wgt. (kg)
CABJBZ600	600	450	480	Integral	1	6.50
CABJBZ700	700	480	490	see below	2	8.00
CABJBZ900	900	480	490	see below	2	10.50

- Lid sits in a recess to minimize the potential for water ingress
- Additional protection through automotive grade rubber seal
- Lockable with 2 key operated locks as standard
- Handles flip up into horizontal position and allow for easy unlocking even with gloves on
- Handles flip down into a safety recess preventing them from rotating open
- Lid opens 180°
- No protruding parts
- Other colours available to special order (subject to minimum order quantity)
- Handles with integrated dust cover
- All logos are laser engraved as standard
- Fully recyclable, chemical resistant, UV stabilised PE
- May be incorporated in the sideguard in accordance with Regulation 73
- Passed UTAC side-impact test

A monogramming service is available (Subject to minimum order quantity)

Toolbox Fixing Kits
Heavy-Duty 25 x 5mm Flat Black Painted Steel Brackets

- Complete with nut and bolt attachment kit

Toolbox Part No.	Normal Loads	Excessive Loads
CABX62	CABX/KIT26	CABX/KIT27
CABX65	CABX/KIT22	CABX/KIT23
CABX80	CABX/KIT20	CABX/KIT21
CABX100	----------	CABX/KIT25
CABX120	----------	CABX/KIT29
CABJBZ700	----------	CABX/KIT35
CABJBZ900	----------	CABX/KIT36
CABX/JBH67	CABX/KIT53	----------
CABX/JBL67	CABX/KIT53	----------

TOOLBOXES – PLASTIC

Toolboxes
Plastic
CABV RANGE

All Daken plastic toolboxes are suited for vehicle fitment and can be incorporated in the side-guard in accordance with UNECE Regulation 73. The required tests were carried out and certified under the supervision of TUV Rheinland.

Part No.	Length (mm)	Height (mm)	Depth (mm)	No. of Handles	Mounting Kit to Suit	Wgt. (kg)
CABV81000/410BP	410	330	340	1	88010	4.0
CABV81002/500BP	500	350	400	1	88010	6.0
CABV81004/600BP	600	400	500	2	88030	9.0
CABV81006/800BP	800	500	500	2	88030	12.0
CABV81008/1000BP	1000	500	500	3	88030	14.0

- All toolboxes supplied with patented Europlex locking 'T' handles. Complete with key cover
- Injection moulded polypropylene
- Fully sealed
- Extremely robust and secure
- Optional mounting/fitting kits available
- Gas springs available to aid operation
- Supplied with up to 3 locking handles, subject to width

Mounting Kits	
Part No.	**To suit**
CABV88010/PR	81000 81002
CABV88030/PR	81004 81006 81008

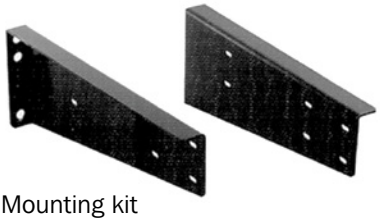

Mounting kit

No. CABV9945/BP Replacement Plastic Europlex handle
wgt. 0.28kg

- Suits all CABV plastic toolboxes
- Supplied with key cover
- Steel version available upon request

Document Holder
Plastic

No. CAB1005
wgt. 0.54kg

Black plastic / Screw on cap
Size: L320 x Ø125mm

- 2 x Ø8mm pre-threaded holes
- Other colours available to order
- Complete with rubber seal & chain

Welwyn Garden City tel +44 (0)1707 371161 fax +44 (0)1707 372603
Coseley tel +44 (0)121 520 0100 fax +44 (0)121 522 3889
website www.cbf.uk.com e-mail: sales@cbf.uk.com

TOOLBOXES – PLASTIC / ALUMINIUM

Storage Boxes
Plastic
CABX RANGE

All CABX range storage boxes are manufactured from fully recyclable moulded polyethylene (PE).

Part No.	Length (mm)	Height (mm)	Depth (mm)	Lid	Mounting Kit	Wgt. (kg)
CABX/JBH67	670	305	230	Hinged	CABX/KIT53	4.0
CABX/JBL67	670	305	230	Detachable	CABX/KIT53	4.0
CABX/JBC40	400	275	330	Hinged	----------	4.0
CABX/JBC40T	400	275	330	Hinged	----------	4.0

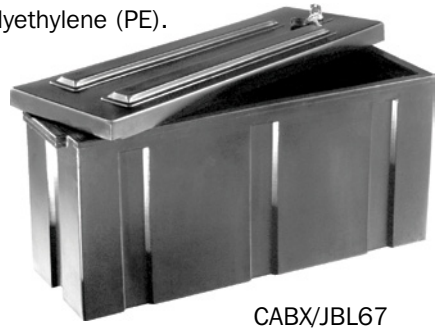

CABX/JBL67

CABX/JBC40

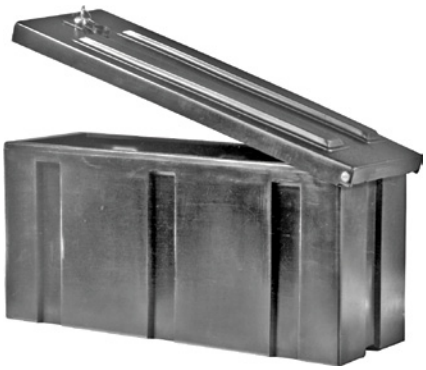

CABX/JBH67

No. CABX/JBH67 Hinged Lid

No. CABX/JBL67 Detachable Lid

- Supplied with safety lock & 2 keys

No. CABX/JBC40

- Supplied with compartment lock and 2 keys

No. CABX/JBC40T

- Supplied with latchlock that can be locked with a padlock

Toolboxes
Aluminium Chequer Plate
CABA RANGE

Manufactured from 2mm aluminium chequer plate, press-formed and welded.

Part No.	Length (mm)	Height (mm)	Depth (mm)	No. of Handles	Wgt. (kg)
CABA450/ACP	450	480	490	1	11.00
CABA600/ACP	600	480	490	1	13.00
CABA800/ACP	800	480	490	1	16.00
CABA1000/ACP	1000	480	490	2	19.00

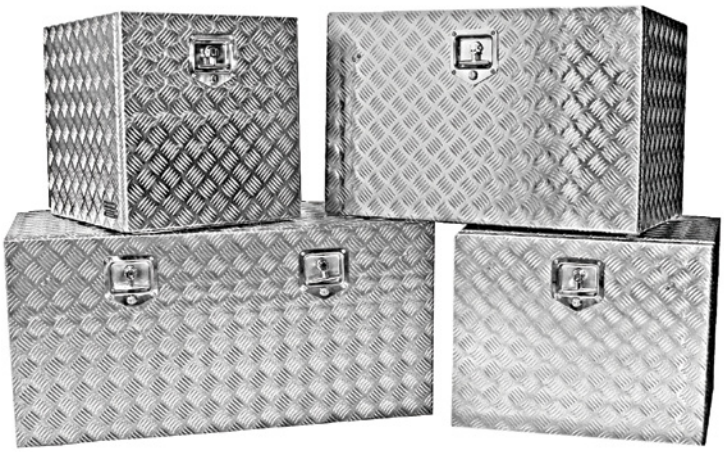

- Fully sealed enclosure
- Robust design/corrosion resistant
- 2mm aluminium
- 'D' section seal
- Stainless steel 'T' locking handles
- Interior base mat supplied with all boxes

TOOLBOXES – STEEL

BAWER

Toolboxes
Steel
CABV25 RANGE

All Bawer CABV25 toolboxes are suited for vehicle fitment and can be incorporated in the side-guard in accordance with UNECE Regulation 73. The required tests were carried out and certified under the supervision of TUV SUD.

Part No.	Length (mm)	Height (mm)	Depth (mm)	No. of Handles	Mounting Kit	Wgt. (kg)
CABV2515/500BS	500	350	400	1	CABV9515/PR	12.21
CABV2520/600BS	600	400	500	1	CABV9515/PR	15.21
CABV2525/800BS	800	500	500	2	CABV9520/PR	24.35
CABV2530/1000BS	1000	500	500	2	CABV9520/PR	30.90
CABV2535/1200BS	1200	500	500	2	CABV9520/PR	34.00
CABV2540/1450BS	1450	500	500	2	CABV9520/PR	40.81

- Fully sealed enclosure
- Robust design / Robotically formed and welded
- 1.5mm steel zinc plated/black powder coated
- Patented Europlex 'T' locking handles
- Gas strut kits available

No. CABV9941/BP
Replacement Plastic Europlex handle
wgt. 0.28kg

- Suits all CABV25 steel toolboxes

Mounting Kits Black Powder Coated Steel (pair)		
Part No.	**Material Thickness**	**Size W x H (mm)**
CABV9515/PR	3mm	**420 x 160**
CABV9520/PR	4mm	**520 x 205**

CABV9941/BP

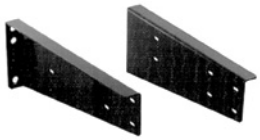

Mounting kit

BAWER

Toolboxes
Stainless Steel
CABV35 RANGE

All Bawer CABV35 toolboxes are suited for vehicle fitment and can be incorporated in the side-guard in accordance with UNECE Regulation 73. The required tests were carried out and certified under the supervision of TUV SUD.

Part No.	Length (mm)	Height (mm)	Depth (mm)	No. of Handles	Mounting Kit	Wgt. (kg)
CABV3515/500SS	500	350	400	1	CABV9525/PR	12.21
CABV3520/600SS	600	400	500	1	CABV9525/PR	15.21
CABV3525/800SS	800	500	500	2	CABV9530/PR	24.35
CABV3530/1000SS	1000	500	500	2	CABV9530/PR	30.90
CABV3535/1200SS	1200	500	500	2	CABV9530/PR	34.00
CABV3540/1450SS	1450	500	500	2	CABV9530/PR	40.81

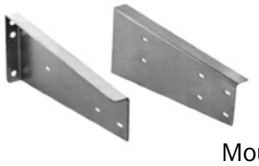

Mounting kit

Mounting Kits Black Powder Coated Steel (pair)		
Part No.	**Material Thickness**	**Size W x H (mm)**
CABV9525/PR	2.5mm	**420 x 160**
CABV9530/PR	2.5mm	**520 x 205**

- Fully sealed enclosure
- Robust design / Robotically formed and welded
- 1.5mm 304G stainless steel
- Stainless steel 'T' locking handles
- Gas strut kits available
- Fully buffed to a matt surface finish

Welwyn Garden City tel +44 (0)1707 371161 fax +44 (0)1707 372603
Coseley tel +44 (0)121 520 0100 fax +44 (0)121 522 3889
website www.cbf.uk.com e-mail: sales@cbf.uk.com

TOWING ACCESSORIES

3.5T (17.5kN) Universal Coupling
25mm Pin

No. FTRL202014 3500kg Capacity
wgt. 3.34kg Ø25mm Pin

- Separate 50mm ball and Ø25mm pin
- Stainless steel lanyard sheathed in nylon
- 2 x Ø16mm Fixing holes at 90mm centres (HT bolts must be used)
- Fixed ball
- Zinc / Clear passivate finish

No. FTRLDB68121
wgt. 1.09kg
- Ø25mm Replacement pin & lanyard

Class:	A50-X/S
SValue:	250kg
DValue Ball:	17.5kN
DValue Jaw:	17.5kN
Max Tow:	3500kg
EC Type:	e11
Approved to:	Reg 55.01

3.5T (17.5kN) Universal Coupling
32mm Pin

No. FTRL201691 3500kg Capacity
wgt. 5.21kg Ø32mm Pin

- Separate 50mm ball and Ø32mm pin
- 4 x Ø13mm Fixing holes at 85 x 45mm centres (HT bolts must be used)
- Fixed ball
- Zinc / Clear passivate finish

No. FTRLDB67187
wgt. 1.12kg
- Ø32mm Replacement pin/chain/tag & 2 x R Clips

Class:	A50-X
SValue:	250kg
DValue Ball:	30.95kN
DValue Jaw:	30.95kN
Max Tow:	3500kg
EC Type:	e11
Approved to:	Reg 55.01

3.5T (17.0kN) Universal Coupling
25mm Pin

No. FTRLV352L 3500kg Capacity
wgt. 3.03kg Ø25mm Pin

- 2 x Ø16.5mm Fixing holes at 90mm centres (HT bolts must be used)
- Removable ball & pin

No. FTRLKIT172
wgt. 1.15kg
- Replacement ball/pin & lanyard

Class:	S
SValue:	200kg
DValue:	17.0kN
Max Tow:	3500kg
EC Type:	e11
Approved to:	Reg 55.01

3.5T (17.4kN) Towing Jaw
25mm Pin

No. FTRL201661 3500kg Capacity
wgt. 2.13kg Ø25mm Pin

- Stainless steel lanyard sheathed in nylon
- 2 x Ø16mm Fixing holes at 90mm centres (HT bolts must be used)

No. FTRLDB68121
wgt. 1.09kg
- Ø25mm Replacement pin & lanyard

Class:	A-S
SValue:	250kg
DValue:	17.4kN
Max Tow:	3500kg
EC Type:	e11
Approved to:	Reg 55.01

TOWING ACCESSORIES

Adjustable Height Couplings

To tow any trailer in a safe and stable condition it is essential that the height of the vehicle's towball/jaw matches that of the trailer. Dixon-Bate adjustable height towbars include a height adjustable coupling plate that provides the perfect solution.
The standard adjustable height towbar range includes three different length frames, each pre-drilled with a range of hole centres for fixing to a vehicle or existing towbar, and includes pin, slider, R clip and a selection of fixing bolts.

- Suits **FTRL201661**, **202014** & **201691** Couplings & Jaws (See page 265)
- Multi-height adjustment – 3 to 6 positions in 50mm increments
- All steel construction
- Slider pre-drilled with 4 holes to accept towing couplings with either 2 hole fixing (BS Au 114a) or 4 hole fixing (BS Au 24)
- Simple, safe and secure locking mechanism
- Adjust the height without tools
- Ø19mm Steel pin to secure slider in place with R clip
- Optional lock to secure slider in frame with key release
- All Dixon-Bate couplings are finished in a black phosphate primer for corrosion resistance and black powder top-coat
- Pins and clips are zinc phosphate bright finish
- Regulation 55.01 approved
- D Value: 23.41 kN

No. FTRL202090
wgt. 7.93kg

- 200mm of adjustment in 50mm increments

No. FTRL202091
wgt. 7.19kg

- 150mm of adjustment in 50mm increments

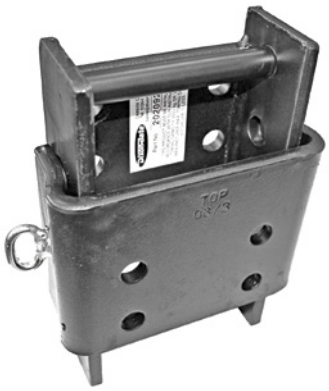

No. FTRL202092
wgt. 7.43kg

- 100mm of adjustment in 50mm increments

Accessories

A wide range of Jockey Wheels and Prop Stands are available upon request

Welwyn Garden City tel +44 (0)1707 371161 fax +44 (0)1707 372603
Coseley tel +44 (0)121 520 0100 fax +44 (0)121 522 3889
website www.cbf.uk.com e-mail: sales@cbf.uk.com

TOWING ACCESSORIES

Shocklink

Shocklink is designed to absorb drawbar shock and reduce driver fatigue. It fits between the vehicle's towbar and the trailer and allows the trailer to move in a vertical direction independent of the towing vehicle. This arrangement results in a much smoother ride reducing risk of damage and fatigue.

No. FTRL202004 Shocklink MKII
wgt. 15.00kg

Shocklink MKII

Optional

No. FTRL202005 Shocklink Adapter Plate
wgt. 6.0kg
An adjustable frame with multi-holed backplate.
Easily adaptable to accommodate different fixing points
(designed to fit an existing towbar using 4 bolts)

- For 4 wheel drive & light commercial vehicles up to 2800kgs Gross Vehicle Weight (GVM) & max S Value (Noseload) of 80kgs use Shocklink MKII
- Available as an adjustable height version, designed to fit vehicles fitted with either a Dixon-Bate adjustable height towbar or via an adapter plate onto an existing vehicle towbar.
- Includes coupling plate pre-drilled with 2 holes at 90mm centres
- Designed to accept standard towballs, universal couplings & jaws with coupling holes to BS Au 114a
- Adjustable height version only
- Includes two pins and clips for fitting either to an adjustable height frame or adapter plate
- M16 coupling bolts supplied (refer to instructions for correct length)
- Suitable for use with stabilisers.
- Regulation 55.01 approved

How does it work?
The Shocklink 'floats' in a vertical direction similar to that of a shock absorber in that it reacts to changes in the motion of the trailer as it is towed over different road surfaces, at varying speeds. It is a sealed unit containing two springs with rubber snubbers that effectively absorb up to 70% of the shockwaves being transmitted along the trailer's drawbar.

Shocklink Adapter Plate

Agricultural Trailer Hitches

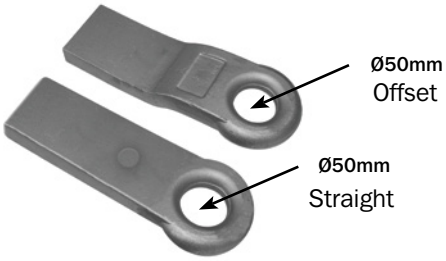

Straight

No. FTRL124/12S	305mm	wgt. 6.00kg
No. FTRL124/16S	405mm	wgt. 8.00kg
No. FTRL124/18S	460mm	wgt. 9.00kg

Off-Set

No. FTRL124/12C	305mm	wgt. 6.00kg
No. FTRL124/16C	405mm	wgt. 8.00kg
No. FTRL124/18C	460mm	wgt. 9.00kg

- For agricultural use only
- Size: W90 x D30mm
- Forged mild steel-heat treated

← **Direction** Maximum breaking load on eye only – 24000kgs

↓ **Direction** Bending load on eye only – 5750kgs

Tow Ball

No. FTRL353 Zinc plated
wgt. 1.59kg

- Meets the requirements as specified in EEC Directive 94/20/EC
- Max D value: 17kN
- Class A50-X
- 2 x Ø16.5mm fixing holes

TUBES

Tube
Galvanized, Stainless Steel, Zinc Plated
to suit Door Locking Mechanisms

No. LKGR16/2500SS	Stainless steel (304G)
wgt. 1.71kg	Ø16mm x L2500 x 2mm wall thickness
No. LKGR16/3000ZP	Zinc plated
wgt. 2.03kg	Ø16mm x L3000 x 1.5mm wall thickness
No. LKGR22/2500SS	Stainless steel (304G)
wgt. 2.35kg	Ø22mm x L2500 x 2mm wall thickness
No. LKGR22/3000GV	Galvanized
wgt. 3.06kg	Ø22mm x L3000 x 2mm wall thickness
No. LKGR27/2500SS	Stainless steel (304G)
wgt. 2.87kg	Ø27mm x L2500 x 2mm wall thickness
No. LKGR27/3000SS	Stainless steel (304G)
wgt. 3.45kg	Ø27mm x L3000 x 2mm wall thickness
No. LKGR27/3000GV	Galvanized
wgt. 4.50kg	Ø27mm x L3000 x 2.5mm wall thickness
No. LKGR34/3000GV	Galvanized
wgt. 7.43kg	Ø34mm x L3000 x 3mm wall thickness

- For door mechanisms to suit, see pages 40-50

Aluminium Tube
Curtain Pole

No. LKGR25/3300AT	Ø25mm x L3300 x 1.5mm wall thickness
wgt. 2.00kg	
No. LKGR38/4000AT	Ø38mm x L4000 x 1.6mm wall thickness
wgt. 2.20kg	
No. LKGR50/3300AT	Ø50mm x L3300 x 3.0mm wall thickness
wgt. 3.96kg	

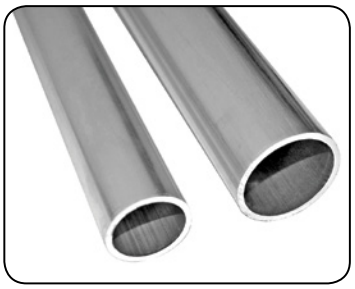

- 6063T6 Grade Mill Finish
- For curtain tensioners to suit, see pages 36-39

Tube Inserts
Polyethylene

- Ribbed for easy assembly and secure fixing
- Provides protection from sharp tube edges
- Manufactured from low density polyethylene (LDPE)

Matt finish

Polished finish

Square & Rectangular Range						
Part No.	**W x W (mm)**	**H (mm)**	**h1 (mm)**	**L (mm)**	**Finish (black)**	**Wgt. (kg)**
BUNG199288	25 x 25	5.0	11.5	1.0-2.5	Polished	0.004
BUNG11770	40 x 20	5.0	11.5	1.0-3.0	Polished	0.006
BUNG199062	40 x40	5.0	14.5	1.0-3.0	Polished	0.010
BUNG32468	50 x 50	5.0	14.5	1.0-3.0	Polished	0.014
BUNG199229	80 x 40	5.0	14.5	2.0-4.0	Matt	0.019
BUNG32479	100 x 50	8.0	18.5	2.0-4.0	Matt	0.036
BUNG2550B	100 x 100	7.0	22.0	2.0-4.0	Matt	0.074
BUNG111517	120 x 60	6.0	22.0	2.0-4.0	Polished	0.042

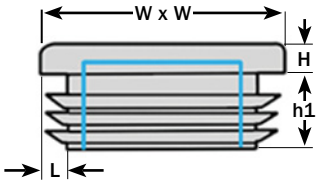

Round Range						
Part No.	**D (mm)**	**H (mm)**	**h1 (mm)**	**L (mm)**	**Finish (black)**	**Wgt. (kg)**
WNGM10173	32.0	5.0	11.5	1.0-3.0	Polished	0.004

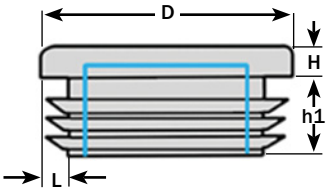

- Many other sizes available upon request

Welwyn Garden City tel +44 (0)1707 371161 fax +44 (0)1707 372603
Coseley tel +44 (0)121 520 0100 fax +44 (0)121 522 3889
website www.cbf.uk.com e-mail: sales@cbf.uk.com

TWIST LOCKS

Twist Lock
Retractable

No. LKTW860
wgt. 8.60kg

- Fully retractable, suitable for use on most types of vehicle
- Locks corner casting through full 90° with positive locking
- Fabricated steel body / forged head assembly
- Suitable for use with Standard ISO corner castings – see page 270

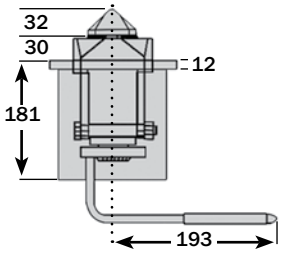

Locked position

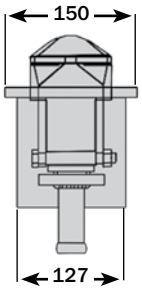

Unlocked position

Twist Lock
Left Hand

No. LKTW875/LH
wgt. 8.50kg

- Suitable for de-mountable bodies / units
- Sprung loaded handle
- Yellow painted
- Plastic handle cover
- Fabricated steel body
- 6 x Ø10mm Fixing holes

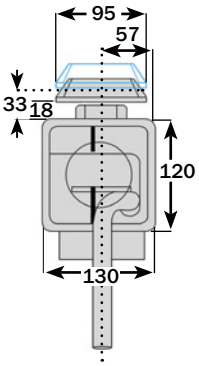

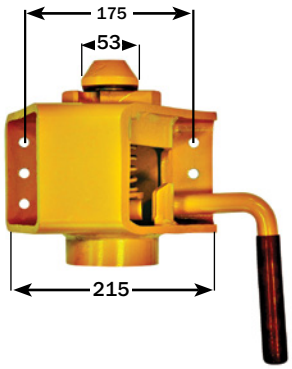

Twist Lock
Right Hand

No. LKTW875/RH
wgt. 8.50kg

- Suitable for de-mountable bodies / units
- Sprung loaded handle
- Yellow painted
- Plastic handle cover
- Fabricated steel body
- 6 x Ø10mm Fixing holes

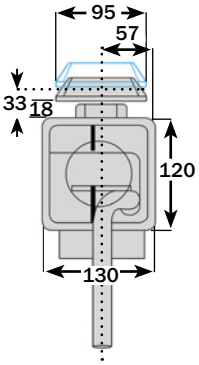

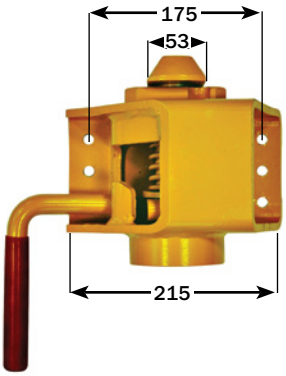

Sprung Loaded Release Plunger
Self Colour / Zinc Plated

No. LKTW30019/CDSC Cranked down
wgt. 1.26kg
No. LKTW30020/CUSC Cranked up
wgt. 1.26kg

- Heavy duty design
- Complete with grease nipple
- Self colour body / Zinc plated handle
- All steel construction
- Weld-on

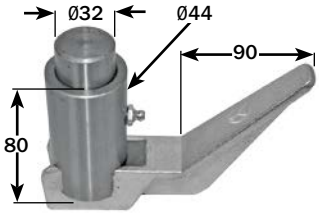

LKTW30019/CDSC
CRANKED DOWN

LKTW30020/CUSC
CRANKED UP

TWIST LOCKS

ISO Corner Castings
Standard Type

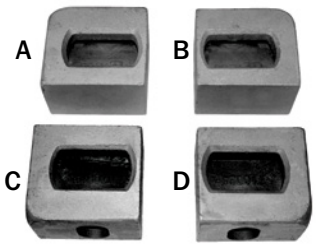

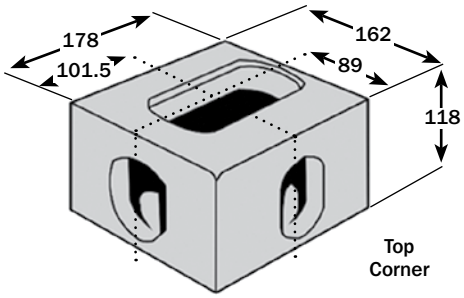

No. LKTWT20100/L	Top corner
wgt. 10.53kg	Left hand (A)
No. LKTWT20100/R	Top corner
wgt. 10.53kg	Right hand (B)
No. LKTWB20000/L	Bottom corner
wgt. 10.53kg	Left hand (C)
No. LKTWB20000/R	Bottom corner
wgt. 10.53kg	Right hand (D)

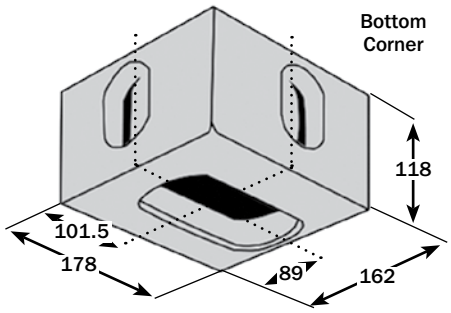

Right hand as drawn
(Left hand opposite)

- Standard type to suit all ISO requirements
- Cast from high grade steel
- Designed for low temperature, working at -40°c as standard
- Made in accordance with ISO1161/BS 3951 Lloyds register guidance note A
- Inspection certificate issued by Bureau Veritas
- Certificate of Conformity available upon request

Cone Casting
Quarter Guide

No. LKTW895/QGSC
wgt. 3.20kg

- Demountable body / unit guide
- Straight lift system
- Weldable cast steel
- Self colour finish

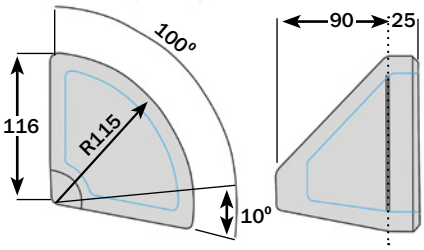

Cone Casting
Half Guide

No. LKTW895/HGSC
wgt. 5.39kg

- Demountable body / unit guide
- Straight lift system
- Weldable cast steel
- Self colour finish

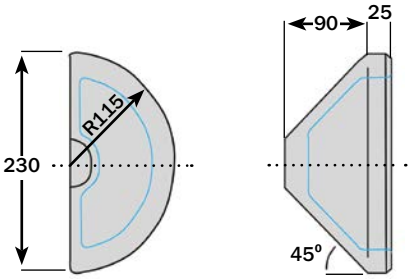

Welwyn Garden City tel +44 (0)1707 371161 fax +44 (0)1707 372603
Coseley tel +44 (0)121 520 0100 fax +44 (0)121 522 3889
website www.cbf.uk.com e-mail: sales@cbf.uk.com

VENTILATORS

Flettner TCX-2™ Ventilator

Flettner Ventilator

The benchmark in rotary ventilators

The Flettner TCX-2™ represents the very latest generation of rotary ventilators and has been designed with one over-riding purpose in mind – to be the absolute best.
Flettner Ventilator Ltd has always designed ventilators that are extremely tough and thoroughly reliable. The **TCX-2™** is no exception, but it represents a step change increase in performance.
The **TCX-2™** has been designed using leading-edge computer modelling techniques. No stone has been left unturned to maximise the efficiency and sheer torque it delivers. The result: a rotary ventilator that extracts nearly twice as much air as the famous Flettner 2000 (source MIRA Ltd). Incorporating features that include an integral air concentrator and an ultra-efficient centrifugal fan the **TCX-2™** is finely tuned for Torque Concentrated Extraction. As if that weren't enough the new **TCX-2™** is also much simpler to fit than a conventional rotary ventilator. The reduced fitting time represents a substantial saving in labour costs compared with previous models.
Meticulous attention to every detail of quality and design are Flettner Ventilator's hallmarks. State-of-the-art manufacturing and rigorous quality management ensure that each and every **TCX-2™** Ventilator is built to Flettner's exacting standards. The bearings are incredibly smooth-running and are made from high quality stainless steel.
The polypropylene rotor head is tough and durable.

Standard Base Circular – 145mm

No. VEN/TCX/BLKSB Black
No. VEN/TCX/WHTSB White
wgt. 1.02kg

Narrow Base Oval – 108mm

(Suitable for ribbed roofs)

No. VEN/TCX/BLKNB Black
No. VEN/TCX/WHTNB White
wgt. 1.08kg

Shutter

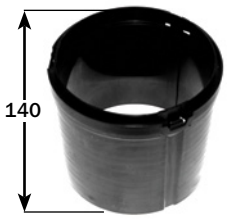

Adapter

Optional

No. VEN/TCX/ADAPTER Adapter to suit 15-140mm duct
wgt. 0.31kg

Wind Speed		Air Extraction Rate	
mph	km/h	Cubic Ft per min	Cubic M per min
10	16	18	0.52
20	32	37	1.05
30	48	58	1.64
40	64	81	2.28
50	80	102	2.89
60	96	126	3.56
70	112	149	4.21

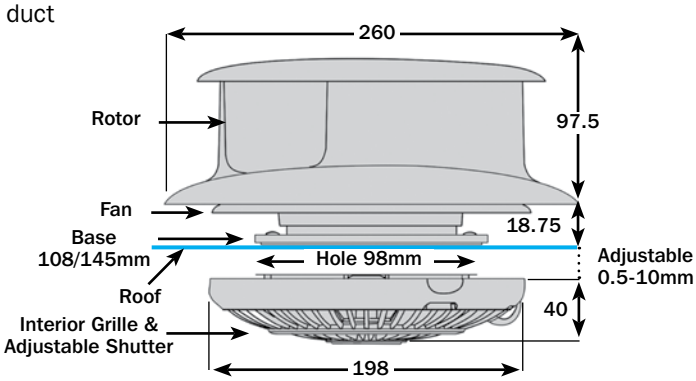

Technology

The TCX-2™ is powered by a rotor that catches the wind or the air stream created by the motion of a vehicle. Beneath the rotor is a powerful centrifugal fan that expels air outwards and thus draws stale air from below. The principle is deceptively simple, but the TCX-2™ has been designed using state-of-the-art computational flow dynamics modelling combined with rigorous wind tunnel testing in order to achieve optimal air extraction and peak efficiency.

Peace of Mind

The TCX-2™ is designed and constructed to eliminate the entry of rain, dust and downdraughts. The unit delivers maintenance-free performance with no electrical connections to worry about, no drain on batteries and no running costs. Round the clock ventilation is provided wherever there is a slight breeze even when a vehicle is parked or where a building has no power supply.

- Extracts fumes, flammable gases
- Combats excess heat/ condensation/odours

Installation

Installation onto the roof of a vehicle or building is simple, requiring only a single locking nut fixing and a 98mm vent aperture. An adaptor is available to enable the ventilator to bridge thicker roof cavities, and base options are available for compatibility with most ribbed roofs.

VENTILATORS

Flettner '2000' Ventilator

Flettner Ventilator

The definitive rotary ventilator

Known for its sheer reliability the **Flettner '2000'** is firmly established as the definitive wind-powered rotary ventilator. Used around the world the **Flettner '2000'** has proved itself to be tough, durable and utterly reliable. Capable of operating in extreme conditions this ventilator is built to last.

From vans to buses, from ambulances to 4 x 4s and from fishing vessels to glider trailers the **Flettner '2000'** provides around the clock ventilation with no battery drainage. That means less heat build-up, less condensation and no build-up of dangerous fumes.

Discreet, compact and extremely quiet, the **Flettner '2000'** is also an ideal roof ventilator for homes, especially where the removal of excess heat and condensation within attic spaces is required, or for situations where an electricity supply is not readily available.

Meticulous attention to detail and design are Flettner Ventilator's hallmarks. Engineering expertise and rigorous quality management ensure that each and every **Flettner '2000'** ventilator is built to Flettner's exacting standards. The bearings are incredibly smooth-running and are made of high quality stainless steel. The polypropylene rotor head is tough and durable. The Flettner maxim has never been more true: **"Fit It and Forget It"**.

No. VEN2000 Black
No. VEN2000/WHITE White
wgt. 0.85kg

Optional

No. VEN2000/AD Adapter to suit 5-45mm duct
wgt. 0.08kg

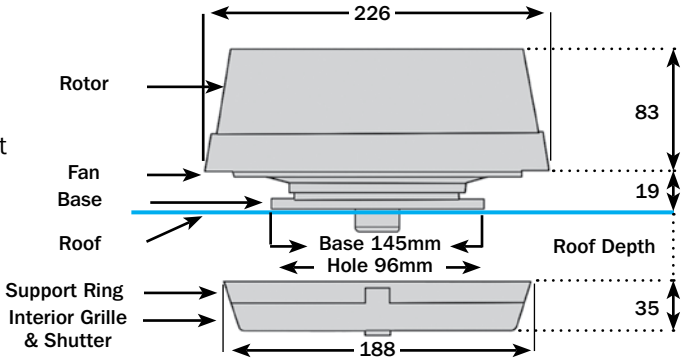

Adapter

Internal Grille & Shutter

Wind Speed		Air Extraction Rate	
mph	km/h	Cubic Ft per min	Cubic M per min
10	16	8	0.23
20	32	19	0.54
30	48	30	0.84
40	64	41	1.16
50	80	52	1.48
60	96	63	1.79
70	112	75	2.13

How it works

The Flettner '2000' is the result of over 70 years of experience in the design of wind-driven rotary ventilators. It is powered by a rotor that catches the wind or the air stream created by the motion of a vehicle. Beneath the rotor is a powerful centrifugal fan that expels air outwards and thus draws stale air out from below, helping to eliminate excess heat, condensation, mould and the build-up of vapours and gases.

Peace of Mind

The Flettner '2000' is designed and constructed to eliminate the entry of rain, dust and downdraughts. The unit delivers maintenance-free performance with no electrical connections to worry about, no drain on batteries and no running costs. Quiet, round the clock ventilation is provided wherever there is a slight breeze even when a vehicle is parked or where a building has no power supply.

- Extracts fumes, flammable gases
- Combats excess heat/ condensation/odours

Installation

Installation onto the roof of a vehicle or building is simple, requiring only a four bolt fixing and a 96mm circular vent aperture. An adaptor is available to enable the ventilator to bridge thicker roof cavities, or the insulation layer within a double-skinned roof.

Welwyn Garden City tel +44 (0)1707 371161 fax +44 (0)1707 372603
Coseley tel +44 (0)121 520 0100 fax +44 (0)121 522 3889
website www.cbf.uk.com e-mail: sales@cbf.uk.com

VENTILATORS

Rotary Ventilator & Grille

Internal Grille & Shutter

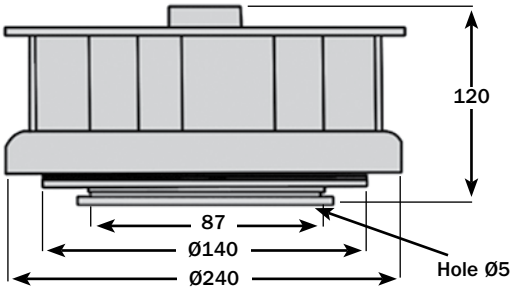

Wind Speed		Air Extraction Rate	
mph	km/h	Cubic Ft per min	Cubic M per min
10	16	12	0.34
20	32	44	1.25
30	48	78	2.20
40	64	106	3.00
50	80	140	3.96
60	96	165	4.70
70	112	192	5.43

No. VEN1800/B Ventilator Black
No. VEN1800/W Ventilator White
wgt. 0.80kg

No. VEN1800/GR/BLK Interior Grille to suit
wgt. 0.15kg

- Design based upon a twin-vaned air-scoop which spins in the air-stream created by motion of the vehicle. This drives 8 vanes in the base of the ventilator, drawing stale air from the compartment beneath
- Air-flow is regulated by an open-close grille fitted in the roof aperture
- Moulded in ABS resin with 2 steel bearings and stainless steel spindle
- Construction prevents entry of rain, dust, and down-draughts. Air-scoop revolves on two steel bearings and will catch the breeze even in a stationary (exterior) location

Rotary Ventilator (Low Profile)
'Turbo II'

Inner Grille

Inside view

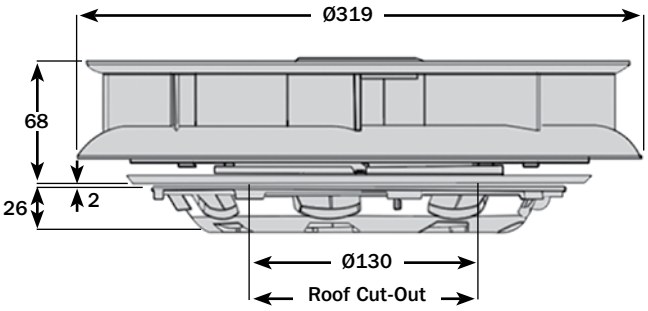

Wind Speed		Air Extraction Rate	
mph	kn/h	Cubic Ft per min	Cubic M per min
12.5	20	25.5	0.71
25.0	40	52.0	1.48
37.5	60	82.0	2.33
50.0	80	112.2	3.17
62.5	100	144.6	4.09
75.0	120	175.4	4.95

No. VEN027100/BLK Ventilator Black
No. VEN027000/WHT Ventilator White
wgt. 1.20kg

- Suitable for roof thickness from 1 to 21mm
- The Low Profile 'Turbo II' has been designed to protrude a maximum of 72mm above the vehicle's roof and low enough to fit under most roof mounted carrying racks, the 8 vaned air scoop rotates freely while the vehicle is in motion drawing out stale air (extraction figures shown).
- Easy to mount – simply make a 130mm dia. hole and bond into place using suitable adhesive and seal the outside edge of the ventilator. No mechanical fixings are required.
- Moulded in ABS resin, c/w 2 bearings and a stainless steel spindle

VENTILATORS

Motorised Ventilator
Low Profile / White Plastic

Specification	
Roof Top Opening	230-245mm
External Height	62mm
Speed (RPM)	2600
Air Flow (M3/H)	850
Watt (W)	80
Noise Level (DB)A	52

No. VEN020200/12 12 volt
wgt. 1.76kg white plastic (ABS)

No. VEN020200/24 24 volt
wgt. 1.76kg white plastic (ABS)

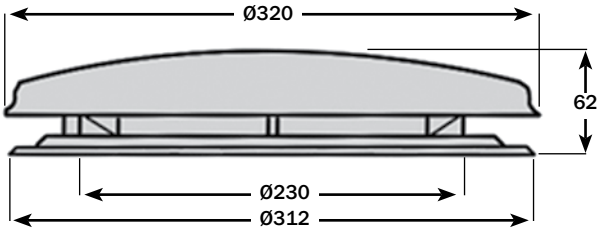

- Reversible motor suction/blowing
- Non-corrosive
- Robust
- Ultra low design

! To be used with the inner grille, or the Internal Ventilation Valve if the air flow is to be shut off.
For inner grilles and internal ventilation valves, see page 275

Motorised Ventilator
Low Profile 'Le Mans' / White Plastic

Specification	
Roof Top Opening	230-245mm
External Height	64mm
Speed (RPM)	2600
Air Flow (M3/H)	850
Watt (W)	80
Noise Level (DB)A	52

No. VEN022200/LM/12 12 volt
wgt. 1.95kg white plastic (ABS)

No. VEN022300/LM/24 24 volt
wgt. 1.95kg white plastic (ABS)

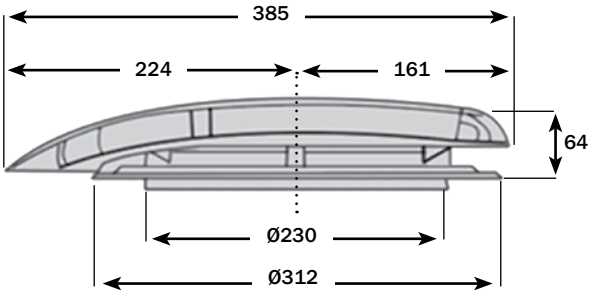

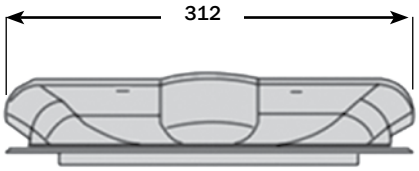

- Reversible motor suction/blowing
- Non-corrosive
- Robust
- Ultra low / modern design

! To be used with the inner grille, or the Internal Ventilation Valve if the air flow is to be shut off.
For inner grilles and internal ventilation valves, see page 275

Welwyn Garden City tel +44 (0)1707 371161 fax +44 (0)1707 372603
Coseley tel +44 (0)121 520 0100 fax +44 (0)121 522 3889
website www.cbf.uk.com e-mail: sales@cbf.uk.com

VENTILATORS

Inner Grille
Black Plastic (ABS)

No. VEN352720/BLK Ø270 x 4mm
wgt. 0.13kg

- Suits all motorised ventilators

Internal Ventilation Valve
Black Plastic (ABS)

No. VEN892024 Ø300mm
wgt. 0.40kg

- Suits all motorised ventilators

3 Way Switch Unit
Dash-Board Mounted

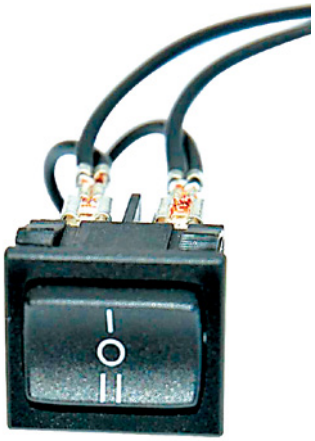

No. VEN894005
wgt. 0.01kg

- On-Off-On
- Suits all motorised ventilator units

Speed Control
Dash-Board Mounted

The device has been developed to adjust the rotation speed of a direct current motor (or light capacity of an electric bulb) by means of the regulation of the voltage. The adjusting range is between 0 and 100% of the rotation speed (or light capacity)

No. VEN303004 11-30v/25amp
wgt. 0.19kg

- Suits all motorised ventilator units

VENTILATORS

Roof Hatch / Ventilator
Smoked Glass Dome

No. VEN90/5000DK/530 530 x 530mm Aperture
wgt. 8.00kg

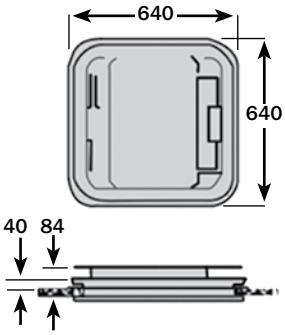

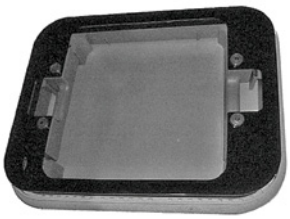

- Suits roof thickness 30-70mm
- Cut-out required: 530 x 530mm
- Grey polypropylene frame
- Smoked glass dome (manufactured to meet ECE 43R Directive)
- Manufactured to 2004/104/EC Directive
- High quality silicone gaskets
- Easy to mount internal frame
- Pre-drilled mounting holes in outside frame
- Electric version available to special order
- ***Ideally suited to the PSV, Horsebox and Motorhome markets***

Emergency Roof Hatch
Supplied with Breakglass Hammer

No. VEN90/6000DK/970 970 x 530mm Aperture
wgt. 14.00kg

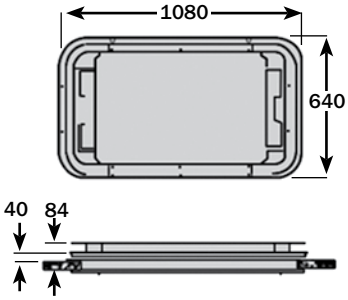

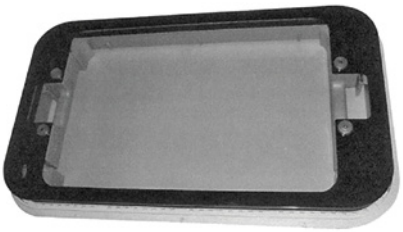

- Suits roof thickness 30-70mm
- Cut-out required: 970 x 530mm
- Grey polypropylene frame
- Smoked glass dome (manufactured to meet ECE 43R Directive)
- Manufactured to 2001/85/EC Directive
- High quality silicone gaskets
- Easy to mount internal frame
- Pre-drilled mounting holes in outside frame
- Electric version available to special order

Roof Hatch
Multi-Directional

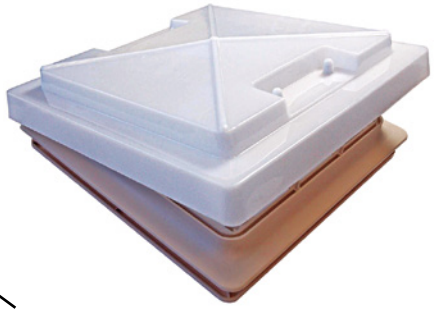

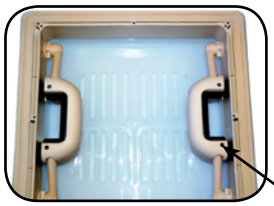

Inside View

Handle Locking Mechanism

No. VEN280 Aperture size: 280 x 280mm
wgt. 1.06kg Dome size: 330 x 330mm
78mm height above roof

No. VEN400 Aperture size: 400 x 400mm
wgt. 1.65kg Dome size: 465 x 465mm
75mm height above roof

- Colour: White opaque top, beige base
- Spring assisted telescopic lifting mechanism
- Inner frame
- Injection moulded thermoplastic

! Lid must be closed while vehicle is in transit

Welwyn Garden City tel +44 (0)1707 371161 fax +44 (0)1707 372603
Coseley tel +44 (0)121 520 0100 fax +44 (0)121 522 3889
website www.cbf.uk.com e-mail: sales@cbf.uk.com

VENTILATORS & GRILLES

Ventilator
Duct Type – White Plastic

Rear view

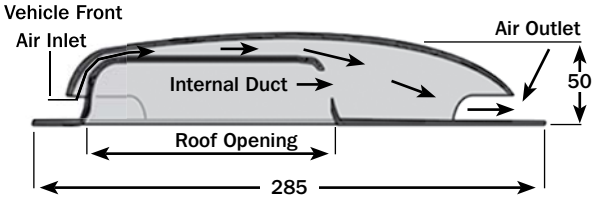

No. VEN021030
wgt. 0.24kg

- Size: L285 x W186 x D50mm
- Colour: White
- Roof top opening: L140mm

Floor Ventilator
Stainless Steel

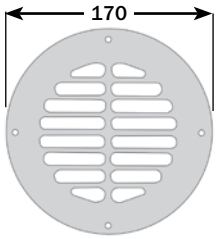

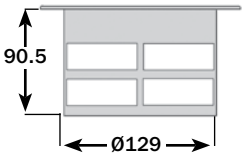

No. VEN89/5500SS
wgt. 0.85kg

- Corrosion resistant
- Robust design
- Only 3mm protrusion
- 4 x Ø5mm Countersunk fixing holes

Floor Ventilator
Black Plastic

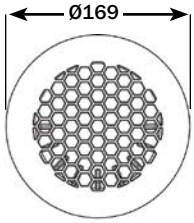

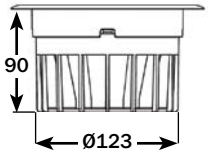

No. VEN89/5600BLK
wgt. 0.31kg

- Corrosion resistant
- Robust design / Black ABS Polycarbonate
- Only 3.5mm protrusion

VENTILATORS & GRILLES

Louvre Grille
Fixed Hook / Aluminium

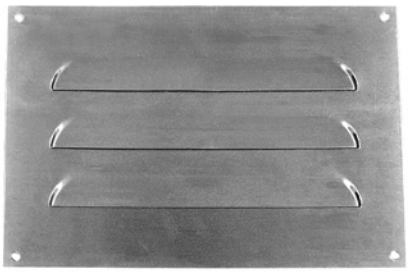

No. VEN96/FL Louvre grille
wgt. 0.08kg Size: W225 x H150mm

- 4 x Ø3mm fixing holes
- Other sizes available to order

Multi-Slotted Louvre Grille
Fixed Hook / Aluminium

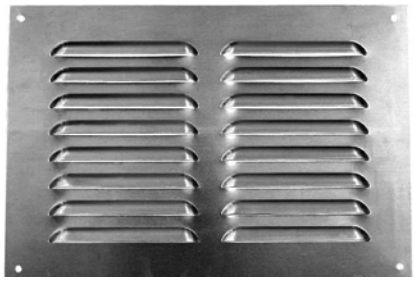

No. VEN96/FLMS Louvre grille
wgt. 0.08kg Size: W240 x H164mm

- 4 x Ø3.5mm fixing holes

No. VEN129/FLMS Louvre grille
wgt. 0.13kg Size: W305 x H225mm

- 6 x Ø3.5mm fixing holes
- Other sizes available to order

Slotted Grille
Hit & Miss / Aluminium

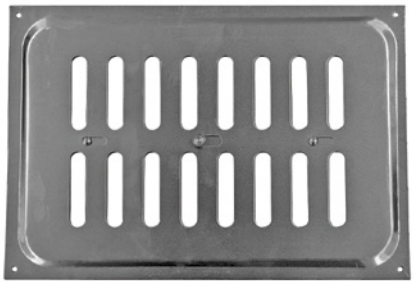

No. VEN96/HM Slotted grille
wgt. 0.11kg Size: W240 x H164mm

- 4 x 3mm fixing holes

No. VEN129/HM Slotted grille
wgt. 0.20kg Size: W305 x H230mm

- 4 x 3mm fixing holes
- Other sizes available to order

Square Mesh Ventilator
Brass

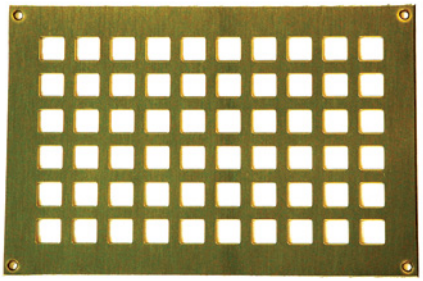

No. VEN3778/SQBR Square mesh
wgt. 0.24kg Size: W305 x H229mm

- 4 x Ø4.5mm fixing holes
- 1.2mm brass
- Ideal for floor mounting
- Other sizes and materials available to order

Welwyn Garden City tel +44 (0)1707 371161 fax +44 (0)1707 372603
Coseley tel +44 (0)121 520 0100 fax +44 (0)121 522 3889
website www.cbf.uk.com e-mail: sales@cbf.uk.com

WHEEL CHOCS

Takler

Small Wheel Choc
Heavy Duty / Thermoplastic

No. WNGM/TK2011 Bright yellow
wgt. 1.50kg
Size: L390 x W160 x H200mm

- For use on small commercial vehicles
- Complies with ADR requirements
- Conforms to EC regulation DIN 76051-G46
- Robust and durable
- Steel grip strip

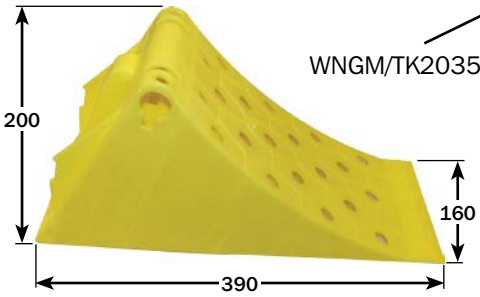

Steel Grip Strip

No. WNGM/TK2035 Wheel choc holder
wgt. 0.40kg Black plastic

- Suits **WNGM/TK2011**

No. WNGM/TK2095 Plastic fixing support
wgt. 0.16kg Size: L215 x W55mm

- Suits **WNGM/TK2011** & **WNGM/TK2025**

WNGM/TK2095

Takler

Large Wheel Choc
Heavy Duty / Thermoplastic

No. WNGM/TK2025 Bright yellow
wgt. 1.70kg
Size: L470 x W201 x H225mm

- For use on large commercial vehicles
- Complies with ADR requirements
- Conforms to EC regulation DIN 76051-E53
- Robust and durable
- Steel grip strip

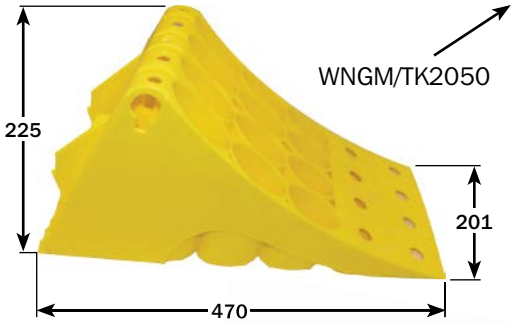

Steel Grip Strip

No. WNGM/TK2050 Wheel choc holder
wgt. 0.70kg Black plastic

- Suits **WNGM/TK2025**

No. WNGM/TK2095 Plastic fixing support
wgt. 0.16kg Size: L215 x W55mm

- Suits **WNGM/TK2011** & **WNGM/TK2025**

WNGM/TK2095

Wheel Choc
Rubber

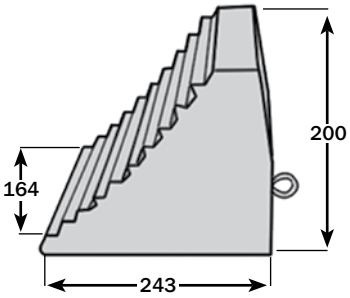

No. RUBF2024/CK Natural rubber
wgt. 6.80kg Compound

- Complete with tie ring

WHEELS

6 Stud Spare Wheel Carrier
Powder Coated Black

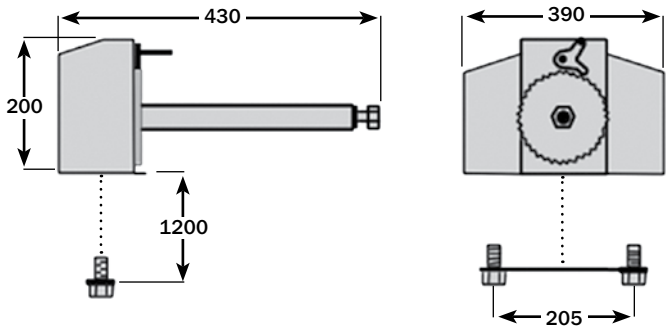

No. AMSC232024 Side mounted carrier
wgt. 6.20kg To suit 205mm stud centres

- Suitable for trucks & trailers fitted with off-set wheel rims and stud centres of 205mm
- Plain rear mounting plate allows fixing bolts to be positioned as required
- Drawing available upon request

10 Stud Spare Wheel Carrier
Powder Coated Black

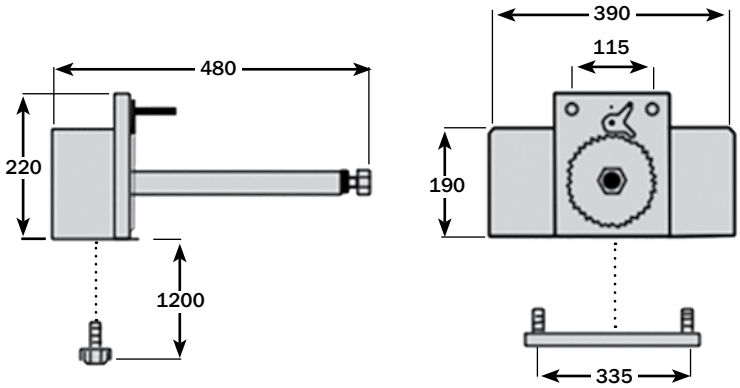

No. AMSC232039 Side mounted carrier
wgt. 11.40kg To suit 225, 275 & 335mm stud centres

- Suitable for trucks & trailers fitted with off-set wheel rims
- Pre-drilled front mounting plate containing 2 x Ø18mm holes
- Drawing available upon request

Wheel Trims
Stainless Steel

Front

Rear

Attachment Ring

No. MISC175/4SS 444mm (17.5")
wgt. 1.50kg / set 2 x Front & 2 x rear

No. MISC225/4SS 570mm (22.5")
wgt. 1.90kg / set 2 x Front & 2 x rear

- All sets supplied with attachment ring, security bolts and tool

Welwyn Garden City tel +44 (0)1707 371161 fax +44 (0)1707 372603
Coseley tel +44 (0)121 520 0100 fax +44 (0)121 522 3889
website www.cbf.uk.com e-mail: sales@cbf.uk.com

WHEELS

Wheel Nut Indicators
'ARROW-POINT'

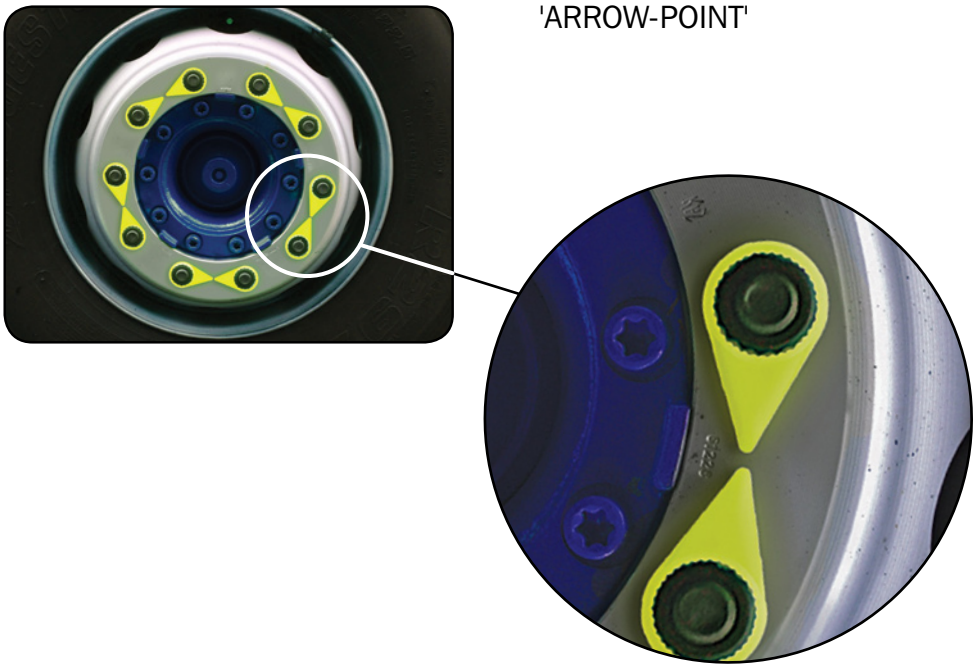

WHEEL SAFETY: MAKE A POINT OF IT

The 'ARROW-POINT' markers will assist the fleet operator and drivers in identifying potential wheel loss incidents.

No. MISC360/027/YEL wgt. 0.11kg / pack of 50	27mm Nut size 50 Units per pack
No. MISC360/032/YEL wgt. 0.11kg / pack of 50	32mm Nut size 50 Units per pack
No. MISC360/033/YEL wgt. 0.11kg / pack of 50	33mm Nut size 50 Units per pack
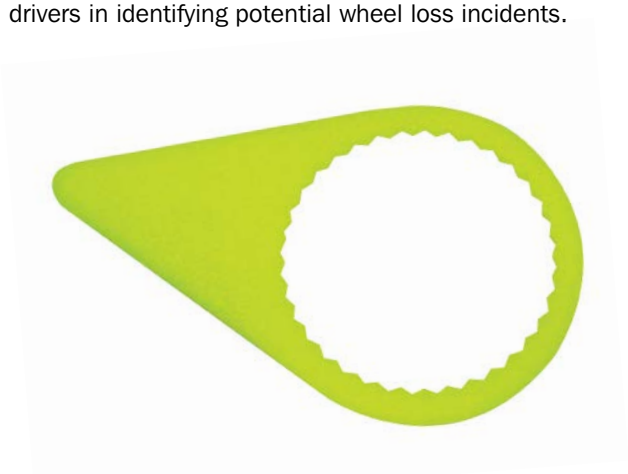
- Clearly visible on a walk around vehicle inspection
- Easy to fit
- Highly visible / Bright yellow
- Durable and heat resistant
- Clear size indication
- 50 Units per pack